WCC 30 - Cable clamp

3240256

https://www.phoenixcontact.com/us/products/3240256

Please be informed that the data shown in this PDF document is generated from our online catalog. Please find the complete data in the user documentation. Our general terms of use for downloads are valid.



Cable clamp, for DIN rails

Your advantages

- The cable clamps provide strain relief
- The halogen-free plastic troughs have been designed to be perfectly secure while simultaneously protecting the conductors
- Individual or bundled cables with a diameter of up to 30 mm can be installed safely and easily

Commercial data

Item number	3240256
Packing unit	25 pc
Minimum order quantity	25 pc
Sales key	BE74
Product key	BE7421
GTIN	4046356464482
Weight per piece (including packing)	49.5 g
Weight per piece (excluding packing)	49.5 g
Customs tariff number	73269098
Country of origin	CN

Technical data

Product properties

Product type	Cable feed-through

Dimensions

Dimensional drawing	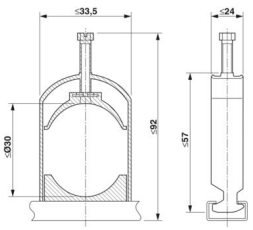
Wrench size	10 mm
Wrench size for mounting	10 mm

Material specifications

Material	Steel
Coating	zinc plating

Cable/line

External cable diameter	26 mm ... 30 mm

Mounting

Mounting type	DIN rail mounting

Drawings

Dimensional drawing

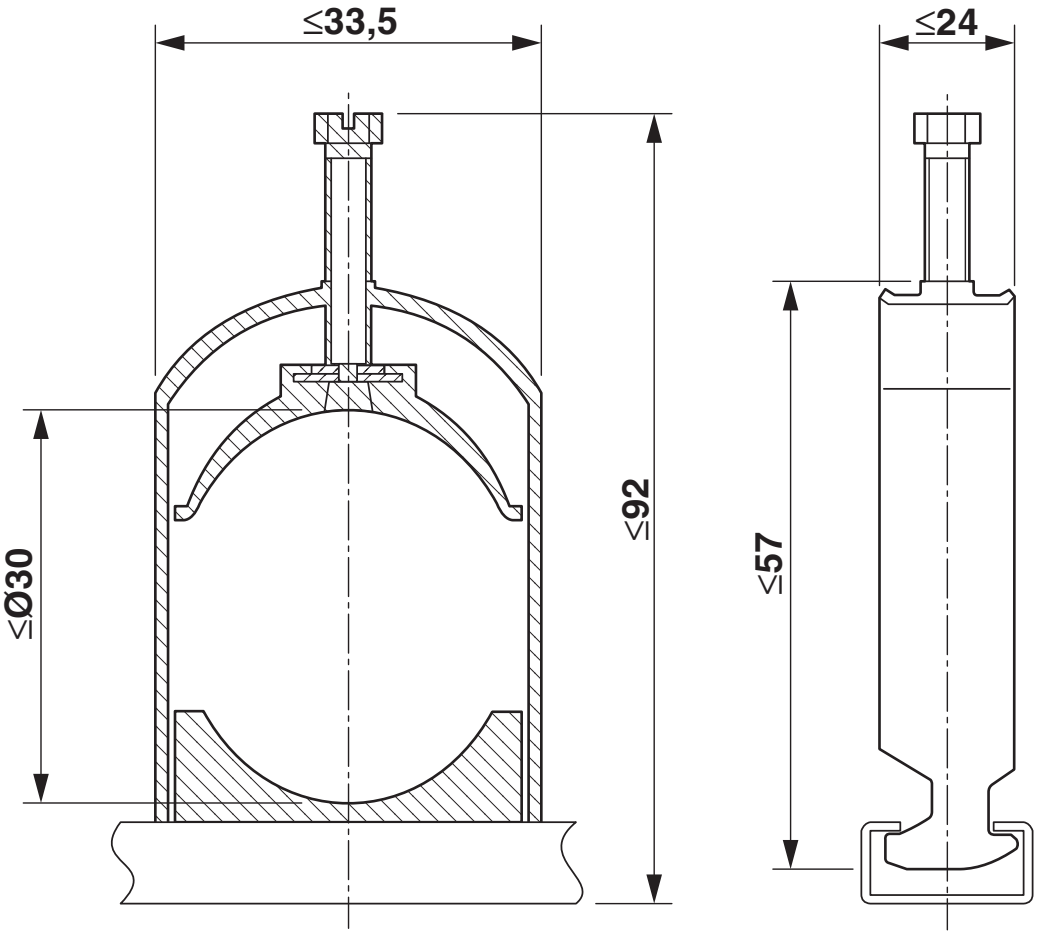

Classifications

ECLASS

ECLASS-13.0	23159090
ECLASS-15.0	23159090

ETIM

ETIM 10.0	EC011571

UNSPSC

UNSPSC 21.0	31162900

Environmental product compliance

EU RoHS

Fulfills EU RoHS substance requirements	Yes, No exemptions

China RoHS

Environment friendly use period (EFUP)	EFUP-E
	No hazardous substances above the limits

EU REACH SVHC

REACH candidate substance (CAS No.)	No substance above 0.1 wt%

Phoenix Contact 2026 © - all rights reserved
https://www.phoenixcontact.com

Phoenix Contact USA
586 Fulling Mill Road
Middletown, PA 17057, United States
(+717) 944-1300
info@phoenixcon.com