UT 4-PE/L/HESILED 24 (5X20) 120KOHM - Fuse modular terminal block

3214321

https://www.phoenixcontact.com/us/products/3214321

Please be informed that the data shown in this PDF document is generated from our online catalog. Please find the complete data in the user documentation. Our general terms of use for downloads are valid.



Fuse modular terminal block, fuse type: Glass / ceramics / ..., fuse type: G / 5 x 20, nom. voltage: 24 V, Thermal continuous current I_{th}: 30 A, connection method: Screw connection, Rated cross section: 4 mm^2, cross section: 0.14 mm^2- 6 mm^2, connection method: Screw connection, Rated cross section: 4 mm^2, cross section: 0.14 mm^2- 6 mm^2, mounting type: NS 35/7,5, NS 35/15, color: black

Commercial data

Item number	3214321
Packing unit	50 pc
Minimum order quantity	50 pc
Sales key	BE01
Product key	BE1136
GTIN	4046356895163
Weight per piece (including packing)	36.696 g
Weight per piece (excluding packing)	36.696 g
Customs tariff number	85369095
Country of origin	PL

Technical data

Notes

Order information:	Fuse-link not supplied as standard
General	The current is determined by the fuse used, the voltage by the selected LED. If the fuse is faulty, the downstream circuit will not be disconnected.

Product properties

Product type	Ground terminal block
Product family	UT
Number of connections	5
Number of rows	3
Potentials	3

Insulation characteristics

Overvoltage category	III
Degree of pollution	3

Electrical properties

Fuse type	Glass / ceramics / ...
Rated surge voltage	6 kV
Maximum power dissipation for nominal condition	1.02 W
Fuse	G / 5 x 20
LED voltage range	12 V AC/DC ... 30 V AC/DC
LED current range	0.31 mA ... 0.95 mA
Maximum power dissipation	max. 1.6 W (with single arrangement of the fuse terminal block in the event of overload)
	max. 1.6 W (With interconnected arrangement of several fuse terminal blocks in the event of overload)
	max. 4 W (with single arrangement of the fuse terminal block in the event of a short-circuit)
	max. 2.5 W (With interconnected arrangement of several fuse terminal blocks in the event of a short-circuit)

Input data

LED voltage range	12 V AC/DC ... 30 V AC/DC

Connection data

Grounding foot	Yes
Number of connections per level	2
Nominal cross section	4 mm²

Level 1

Connection method	Screw connection
Screw thread	M3
Note	Please observe the current carrying capacity of the DIN rails.
Tightening torque	0.6 ... 0.8 Nm
Stripping length	9 mm
Internal cylindrical gage	A4
	B3
Connection in acc. with standard	IEC 60947-7-1/IEC 60947-7-2
Conductor cross-section rigid	0.14 mm² ... 6 mm²
Cross section AWG	26 ... 10 (converted acc. to IEC)
Conductor cross-section flexible	0.14 mm² ... 6 mm²
Conductor cross-section, flexible [AWG]	26 ... 10 (converted acc. to IEC)
Conductor cross-section flexible ultrasound-compressed	0.34 mm² ... 6 mm²
Conductor cross-section, flexible [AWG] ultrasound-compressed	22 ... 10 (converted acc. to IEC)
Conductor cross-section flexible (ferrule without plastic sleeve)	0.25 mm² ... 4 mm²
Flexible conductor cross-section (ferrule with plastic sleeve)	0.14 mm² ... 4 mm²
2 conductors with same cross section, rigid	0.14 mm² ... 1.5 mm²
2 conductors with same cross section, flexible	0.14 mm² ... 1.5 mm²
2 conductors with same cross section, flexible, with ferrule without plastic sleeve	0.14 mm² ... 1.5 mm²
2 conductors with the same cross section, flexible, with TWIN ferrule with plastic sleeve	0.5 mm² ... 1.5 mm²
Nominal cross section	4 mm²
Thermal continuous current I_{th}	30 A
Maximum load current	36 A (with 6 mm² conductor cross-section)
Nominal voltage	24 V (the voltage is determined by the light indicator.)

Level 2

Connection method	Screw connection
Screw thread	M3
Tightening torque	0.6 ... 0.8 Nm
Stripping length	9 mm
Internal cylindrical gage	A4
	B3
Connection in acc. with standard	IEC 60947-7-3
Conductor cross-section rigid	0.14 mm² ... 6 mm²
Cross section AWG	26 ... 10 (converted acc. to IEC)
Conductor cross-section flexible	0.14 mm² ... 6 mm²
Conductor cross-section, flexible [AWG]	26 ... 10 (converted acc. to IEC)
Conductor cross-section flexible (ferrule without plastic sleeve)	0.25 mm² ... 4 mm²
Flexible conductor cross-section (ferrule with plastic sleeve)	0.14 mm² ... 4 mm²
2 conductors with same cross section, rigid	0.14 mm² ... 1.5 mm²
2 conductors with same cross section, flexible, with ferrule without plastic sleeve	0.14 mm² ... 1.5 mm²

2 conductors with the same cross section, flexible, with TWIN ferrule with plastic sleeve	0.5 mm² ... 1.5 mm²
Nominal cross section	4 mm²
Nominal current	6.3 A
Maximum load current	6.3 A (the current is determined by the fuse used)
Nominal voltage	24 V (the voltage is determined by the fuse used)

Ex data

Rated data (ATEX/IECEx)

Identification	Ⓔx II 3 G Ex ec IIC Gc
Operating temperature range	-60 °C ... 130 °C
Ex-certified accessories	1205053 SZS 0,6X3,5
	3022276 CLIPFIX 35-5
	3022218 CLIPFIX 35
output	(Permanent)

Ex connection data General

Torque range	0.6 Nm ... 0.8 Nm
Nominal cross section	4 mm²
Rated cross section AWG	12
Connection capacity rigid	0.14 mm² ... 6 mm²
Connection capacity AWG	26 ... 10
Connection capacity flexible	0.14 mm² ... 6 mm²
Connection capacity AWG	26 ... 10
2 conductors with same cross section, solid	0.14 mm² ... 1.5 mm²
2 conductors with the same cross-section AWG rigid	26 ... 16
2 conductors with same cross section, stranded	0.14 mm² ... 1.5 mm²
2 conductors with the same cross-section AWG flexible	26 ... 16
Conductor cross-section flexible, with ferrule without plastic sleeve min.	0.14 mm²
Conductor cross-section flexible, with ferrule without plastic sleeve max.	4 mm²
Single conductor/terminal point, flexible, with ferrule, without plastic sleeve, AWG	26 ... 12
output	(Permanent)

Ex level Level 2

Rated voltage	500 V
Rated current	20 A (4 mm²)
Maximum load current	20 A (6 mm²)
Contact resistance	0.6 mΩ
Temperature increase	40 K (20 A/4 mm²)
output	(Permanent)

Ex level Level 3

Rated voltage	250 V
Rated current	6.3 A (4 mm²)
Maximum load current	6.3 A (6 mm²)
Contact resistance	5 mΩ

Dimensions

Width	6.2 mm
Height	92.7 mm
Depth	94.5 mm
Depth on NS 35/7,5	88.9 mm
Depth on NS 35/15	96.4 mm

Material specifications

Color	black (RAL 9005)
Flammability rating according to UL 94	V0
Insulating material group	I
Insulating material	PA
Static insulating material application in cold	-60 °C
Relative insulation material temperature index (Elec., UL 746 B)	130 °C
Fire protection for rail vehicles (DIN EN 45545-2) R22	HL 1 - HL 3
Fire protection for rail vehicles (DIN EN 45545-2) R23	HL 1 - HL 3
Fire protection for rail vehicles (DIN EN 45545-2) R24	HL 1 - HL 3
Fire protection for rail vehicles (DIN EN 45545-2) R26	HL 1 - HL 3
Surface flammability NFPA 130 (ASTM E 162)	passed
Specific optical density of smoke NFPA 130 (ASTM E 662)	passed
Smoke gas toxicity NFPA 130 (SMP 800C)	passed

Mechanical properties

Mechanical data

Open side panel	No

Environmental and real-life conditions

Oscillation/broadband noise

Specification	DIN EN 50155 (VDE 0115-200):2008-03
Spectrum	Long life test category 1, class B, body mounted
Frequency	f_1 = 5 Hz to f_2 = 150 Hz
ASD level	0.964 (m/s²)²/Hz
Acceleration	0.58g
Test duration per axis	5 h
Test directions	X-, Y- and Z-axis
Result	Test passed

Shocks

Specification	DIN EN 50155 (VDE 0115-200):2008-03
Pulse shape	Half-sine
Acceleration	5g
Shock duration	30 ms
Number of shocks per direction	3
Test directions	X-, Y- and Z-axis (pos. and neg.)
Result	Test passed

Ambient conditions

Ambient temperature (operation)	-60 °C ... 110 °C (Operating temperature range incl. self-heating; for max. short-term operating temperature, see RTI Elec.)
Ambient temperature (storage/transport)	-25 °C ... 60 °C (for a short time, not exceeding 24 h, -60 °C to +70 °C)
Ambient temperature (assembly)	-5 °C ... 70 °C
Ambient temperature (actuation)	-5 °C ... 70 °C
Permissible humidity (operation)	20 % ... 90 %
Permissible humidity (storage/transport)	30 % ... 70 %

Standards and regulations

Connection in acc. with standard	IEC 60947-7-1/IEC 60947-7-2
	IEC 60947-7-3

Mounting

Mounting type	NS 35/7,5
	NS 35/15

Drawings

Application drawing

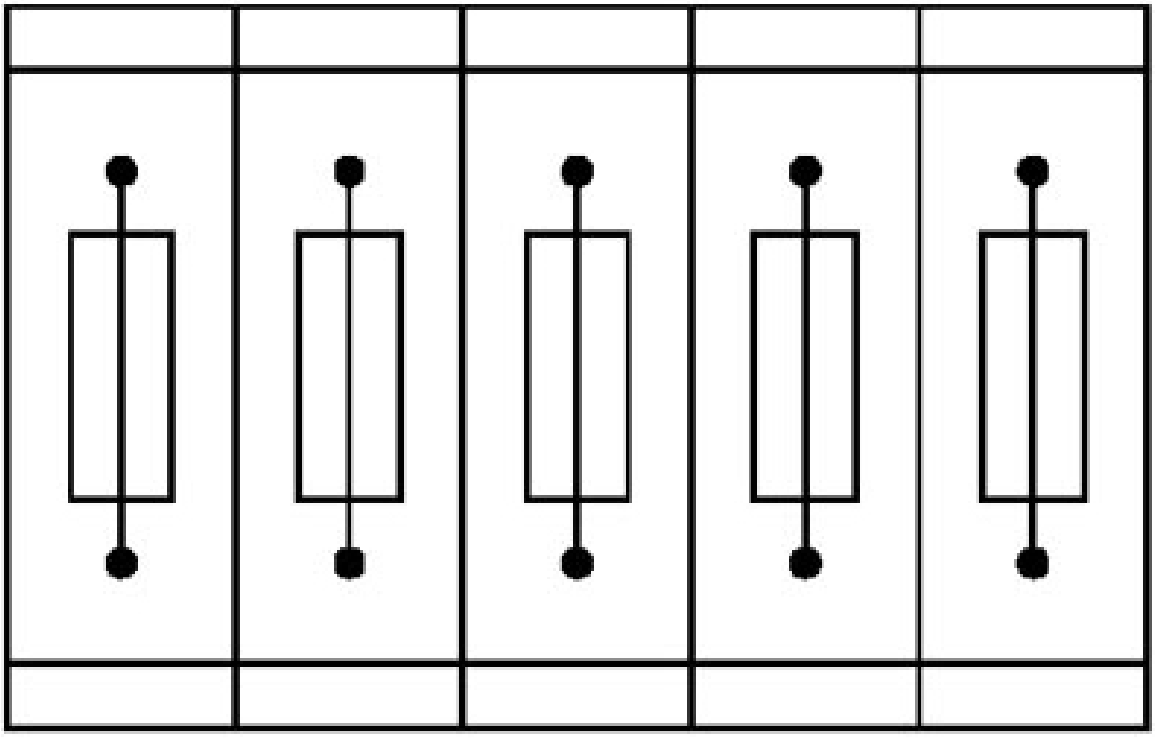

Fuse terminal blocks in interconnected arrangement,
block consisting of 5 fuse terminal blocks

Application drawing

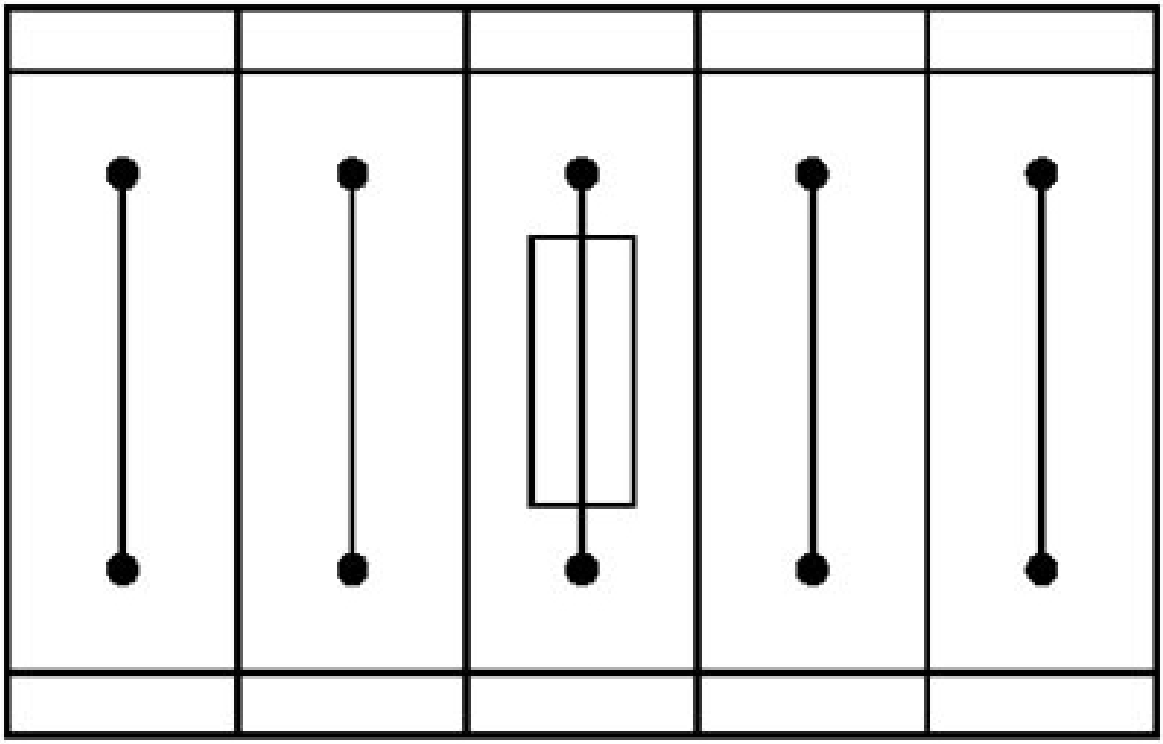

Fuse terminal block in single arrangement,
block consisting of one fuse terminal block and 4 feed-through terminal blocks

Circuit diagram

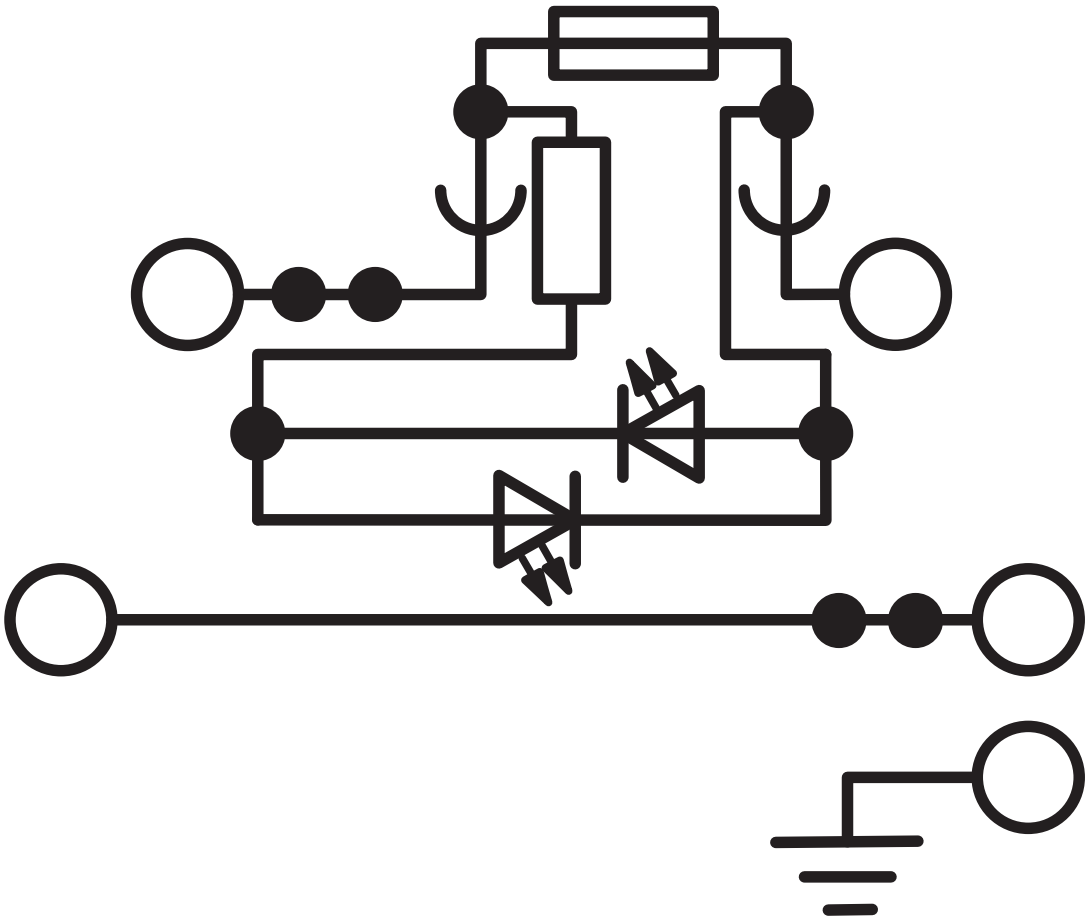

Approvals

To download certificates, visit the product detail page: https://www.phoenixcontact.com/us/products/3214321

cULus Recognized
Approval ID: E60425

	Nominal voltage U_N	Nominal current I_N	Cross section AWG	Cross section mm^2
B				
upper level	300 V	16 A	26 - 10	-
lower level	300 V	20 A	26 - 10	-
PE connection	-	-	26 - 10	-
C				
upper level	300 V	16 A	26 - 10	-
lower level	300 V	20 A	26 - 10	-
PE connection	-	-	26 - 10	-
D				
PE connection	-	-	26 - 10	-

cUL Recognized
Approval ID: E192998

	Nominal voltage U_N	Nominal current I_N	Cross section AWG	Cross section mm^2
keine				
PE connection	-	-	26 - 10	26 - 10
with cartridge fuse-link	300 V	16 A	26 - 10	26 - 10
middle level	300 V	20 A	26 - 10	26 - 10

IECEx
Approval ID: IECExKIWA14.0014U

UL Recognized
Approval ID: E192998

	Nominal voltage U_N	Nominal current I_N	Cross section AWG	Cross section mm^2
keine				
PE connection	-	-	26 - 10	-
with cartridge fuse-link	300 V	16 A	26 - 10	-
middle level	300 V	20 A	26 - 10	-

CCC
Approval ID: 2020322313000632

ATEX
Approval ID: KIWA14ATEX025U

UKCA-EX
Approval ID: CSAE 21UKEX3606U

EAC Ex
Approval ID: KZ 7500525010101950

Classifications

ECLASS

ECLASS-13.0	27250113
ECLASS-15.0	27250113

ETIM

ETIM 10.0	EC000899

UNSPSC

UNSPSC 21.0	39121400

Environmental product compliance

EU RoHS

Fulfills EU RoHS substance requirements	Yes
Exemption	6(c)

China RoHS

Environment friendly use period (EFUP)	EFUP-50
	An article-related China RoHS declaration table can be found in the download area for the respective article under "Manufacturer declaration". For all articles with EFUP-E, no China RoHS declaration table issued and required.

EU REACH SVHC

REACH candidate substance (CAS No.)	Lead(CAS: 7439-92-1)
SCIP	ac5e5ee6-992c-4ede-bb69-ab8e13951f38

EF3.1 Climate Change

CO2e kg	0.252 kg CO2e

Phoenix Contact 2026 © - all rights reserved
https://www.phoenixcontact.com

Phoenix Contact USA
586 Fulling Mill Road
Middletown, PA 17057, United States
(+717) 944-1300
info@phoenixcon.com