PP-H 4/ 1 GNYE - Plug

3212088

https://www.phoenixcontact.com/us/products/3212088

Please be informed that the data shown in this PDF document is generated from our online catalog. Please find the complete data in the user documentation. Our general terms of use for downloads are valid.





Plug, nom. voltage: 800 V, nominal current: 32 A, number of connections: 1, number of positions: 1, connection method: Push-in connection, Rated cross section: 4 mm^2, 1st level connection left, cross section: 0.2 mm^2 - 6 mm^2, color: green-yellow

Your advantages

- Large-surface labeling option
- The Push-in technology COMBI plugs for self-assembly provide solutions that users can implement themselves
- Tested for railway applications

Commercial data

Item number	3212088
Packing unit	50 pc
Minimum order quantity	50 pc
Sales key	BE22
Product key	BE2244
GTIN	4046356483056
Weight per piece (including packing)	5.274 g
Weight per piece (excluding packing)	4.68 g
Customs tariff number	85366990
Country of origin	PL

Technical data

Notes

Notes on operation	COMBI connectors are connectors without switching power in accordance with IEC 61984 and can be connected or disconnected without load or voltage when used as intended

Product properties

Product type	Terminal plug
Area of application	Railway industry
	Machine building
	Plant engineering
Number of positions	1
Pitch	6.2 mm
Number of connections	1
Number of rows	1
Potentials	1

Insulation characteristics

Overvoltage category	III
Degree of pollution	3

Electrical properties

Rated surge voltage	8 kV
Maximum power dissipation for nominal condition	1.02 W

Connection data

Number of connections per level	1
Nominal cross section	4 mm²

1st level connection left

Connection method	Push-in connection
Stripping length	10 mm ... 12 mm
Internal cylindrical gage	A4
Connection in acc. with standard	IEC 61984
Conductor cross-section rigid	0.2 mm² ... 6 mm²
Cross section AWG	24 ... 10 (converted acc. to IEC)
Conductor cross-section flexible	0.2 mm² ... 4 mm²
Conductor cross-section, flexible [AWG]	24 ... 12 (converted acc. to IEC)
Conductor cross-section flexible (ferrule without plastic sleeve)	0.25 mm² ... 4 mm²
Flexible conductor cross-section (ferrule with plastic sleeve)	0.25 mm² ... 4 mm²
2 conductors with the same cross section, flexible, with TWIN ferrule with plastic sleeve	0.5 mm² ... 1 mm²
Nominal cross section	4 mm²
Nominal current	32 A

Maximum load current	32 A (with 6 mm² conductor cross-section)
Nominal voltage	800 V

1st level connection left Connection cross sections directly pluggable

Conductor cross-section rigid	0.5 mm² ... 6 mm²
Conductor cross-section flexible (ferrule without plastic sleeve)	0.5 mm² ... 4 mm²
Flexible conductor cross-section (ferrule with plastic sleeve)	0.5 mm² ... 4 mm²

Dimensions

Width	6.2 mm
Height	21 mm
Depth	42.3 mm
Pitch	6.2 mm

Material specifications

Color	green-yellow
Flammability rating according to UL 94	V0
Insulating material group	I
Insulating material	PA
Static insulating material application in cold	-60 °C
Temperature index of insulation material (DIN EN 60216-1 (VDE 0304-21))	130 °C
Relative insulation material temperature index (Elec., UL 746 B)	130 °C
Fire protection for rail vehicles (DIN EN 45545-2) R22	HL 1 - HL 3
Fire protection for rail vehicles (DIN EN 45545-2) R23	HL 1 - HL 3
Fire protection for rail vehicles (DIN EN 45545-2) R24	HL 1 - HL 3
Fire protection for rail vehicles (DIN EN 45545-2) R26	HL 1 - HL 3
Calorimetric heat release NFPA 130 (ASTM E 1354)	28 MJ/kg
Surface flammability NFPA 130 (ASTM E 162)	passed
Specific optical density of smoke NFPA 130 (ASTM E 662)	passed
Smoke gas toxicity NFPA 130 (SMP 800C)	passed

Mechanical properties

Mechanical data

Open side panel	No

Environmental and real-life conditions

Ambient conditions

Ambient temperature (operation)	-60 °C (max. operating temperature see derating curve)
Ambient temperature (storage/transport)	-25 °C ... 60 °C (for a short time, not exceeding 24 h, -60 °C to +70 °C)
Ambient temperature (assembly)	-5 °C ... 70 °C
Ambient temperature (actuation)	-5 °C ... 70 °C
Permissible humidity (operation)	20 % ... 90 %

Permissible humidity (storage/transport)	30 % ... 70 %

Standards and regulations

Connection in acc. with standard	IEC 61984

Drawings

Schematic diagram

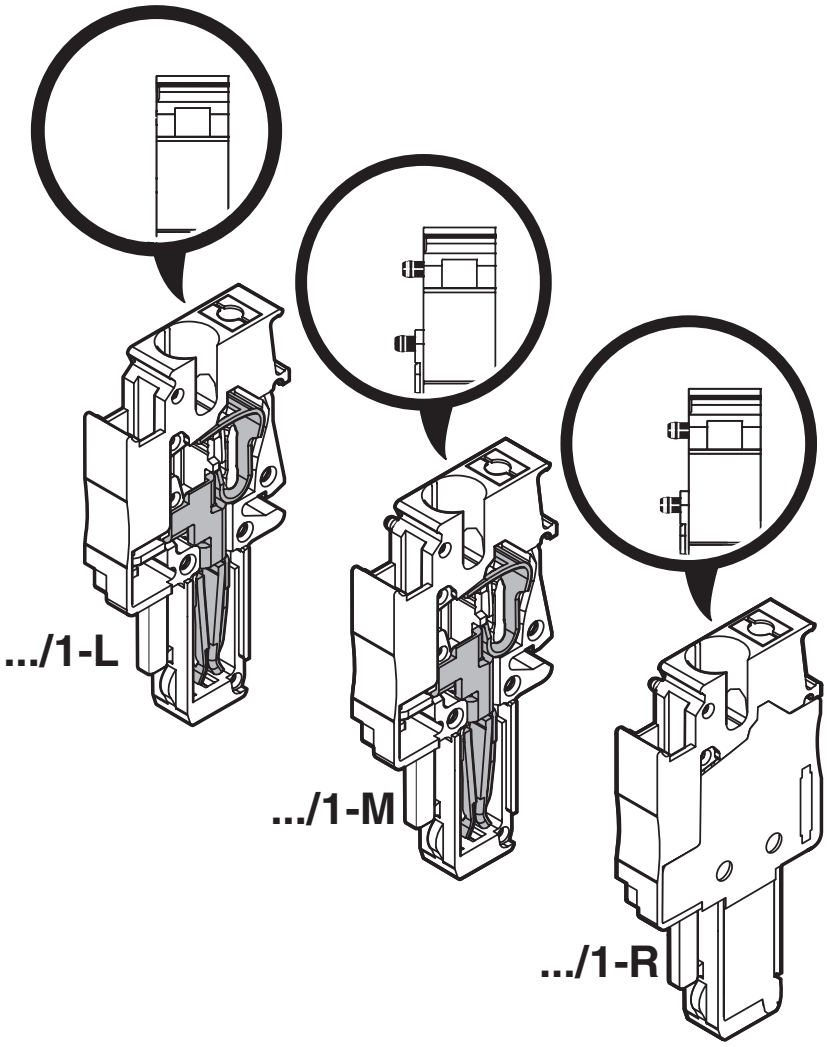

Circuit diagram



Approvals

To download certificates, visit the product detail page: https://www.phoenixcontact.com/us/products/3212088

DNV
Approval ID: TAE000010T

IECEE CB Scheme
Approval ID: DE1-64672_B1_B2

	Nominal voltage U_N	Nominal current I_N	Cross section AWG	Cross section mm^2
keine				
	800 V	32 A	-	-

cULus Recognized
Approval ID: E60425

	Nominal voltage U_N	Nominal current I_N	Cross section AWG	Cross section mm^2
C				
	600 V	28 A	24 - 10	-

BV
Approval ID: 39979/B0 BV

VDE Zeichengenehmigung
Approval ID: 40043445

	Nominal voltage U_N	Nominal current I_N	Cross section AWG	Cross section mm^2
keine				
Only flexible conductors	800 V	32 A	-	0.2 - 4

EAC
Approval ID: KZ7500651131219505

Classifications

ECLASS

ECLASS-13.0	27250306
ECLASS-15.0	27250306

ETIM

ETIM 10.0	EC002021

UNSPSC

UNSPSC 21.0	39121400

Environmental product compliance

EU RoHS

Fulfills EU RoHS substance requirements	Yes, No exemptions

China RoHS

Environment friendly use period (EFUP)	EFUP-E
	No hazardous substances above the limits

EU REACH SVHC

REACH candidate substance (CAS No.)	No substance above 0.1 wt%

Phoenix Contact 2026 © - all rights reserved
https://www.phoenixcontact.com

Phoenix Contact USA
586 Fulling Mill Road
Middletown, PA 17057, United States
(+717) 944-1300
info@phoenixcon.com