FC 4-PCB/8 - Connector

3208694

https://www.phoenixcontact.com/us/products/3208694

Please be informed that the data shown in this PDF document is generated from our online catalog. Please find the complete data in the user documentation. Our general terms of use for downloads are valid.



PCB header, 8-pos.

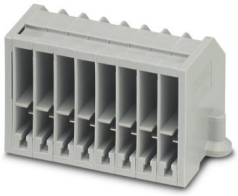

Commercial data

Item number	3208694
Packing unit	10 pc
Minimum order quantity	10 pc
Note	Made to order (non-returnable)
Sales key	BE64
Product key	BE643X
GTIN	4046356663366
Weight per piece (including packing)	35.57 g
Weight per piece (excluding packing)	35.57 g
Customs tariff number	85366990
Country of origin	PL

Technical data

Product properties

Product type	Plug
Number of positions	8
Number of rows	1
Potentials	8

Insulation characteristics

Overvoltage category	III
Degree of pollution	3

Electrical properties

Rated surge voltage	4 kV
Maximum power dissipation for nominal condition	0.77 W

Connection data

Nominal cross section	2.5 mm²
Rated cross section AWG	14

Level 1

Connection method	Spade connection/solder connection
Connection in acc. with standard	IEC 61984
Conductor cross-section rigid	0.5 mm² ... 2.5 mm²
Cross section AWG	20 ... 14 (converted acc. to IEC)
Conductor cross-section flexible	0.5 mm² ... 2.5 mm²
Conductor cross-section, flexible [AWG]	20 ... 14 (converted acc. to IEC)
Nominal current	15 A
Maximum load current	15 A
Nominal voltage	320 V

Dimensions

Dimensional drawing	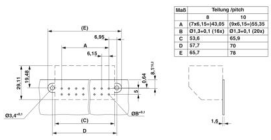
Width	65.7 mm
Height	29.1 mm
Depth	34.3 mm

Material specifications

Color	gray (RAL 7042)
Flammability rating according to UL 94	V0
Insulating material group	I

Insulating material	PA
Static insulating material application in cold	-60 °C
Temperature index of insulation material (DIN EN 60216-1 (VDE 0304-21))	130 °C
Relative insulation material temperature index (Elec., UL 746 B)	130 °C
Fire protection for rail vehicles (DIN EN 45545-2) R22	HL 1 - HL 3
Fire protection for rail vehicles (DIN EN 45545-2) R23	HL 1 - HL 3
Fire protection for rail vehicles (DIN EN 45545-2) R24	HL 1 - HL 3
Fire protection for rail vehicles (DIN EN 45545-2) R26	HL 1 - HL 3
Calorimetric heat release NFPA 130 (ASTM E 1354)	28 MJ/kg
Surface flammability NFPA 130 (ASTM E 162)	passed
Specific optical density of smoke NFPA 130 (ASTM E 662)	passed
Smoke gas toxicity NFPA 130 (SMP 800C)	passed

Electrical tests

Short-time withstand current 2.5 mm²	0.01 kA
Result	Test passed

Mechanical properties

Mechanical data

Open side panel	No

Environmental and real-life conditions

Service life

Insertion/withdrawal cycles	100

Needle-flame test

Time of exposure	30 s
Result	Test passed

Oscillation/broadband noise

Specification	DIN EN 60255-21-1:1996-05 (following)
Frequency	10 Hz ... 150 Hz
Acceleration	1g (84.2 Hz ... 150 Hz)
Test directions	X-, Y- and Z-axis
Result	Test passed

Shocks

Specification	DIN EN 60255-21-1:1996-05 (following)
Pulse shape	Half-sine
Acceleration	30g
Shock duration	11 ms
Number of shocks per direction	3
Test directions	X-, Y- and Z-axis (pos. and neg.)
Result	Test passed

Ambient conditions

Ambient temperature (operation)	-60 °C ... 105 °C (max. short-term operating temperature RTI Elec.)
Ambient temperature (storage/transport)	-25 °C ... 60 °C (for a short time, not exceeding 24 h, -60 °C to +70 °C)
Ambient temperature (assembly)	-5 °C ... 70 °C
Ambient temperature (actuation)	-5 °C ... 70 °C
Permissible humidity (storage/transport)	30 % ... 70 %

Standards and regulations

Connection in acc. with standard	IEC 61984

Mounting

Mounting type	PCB mounting

Drawings

Dimensional drawing

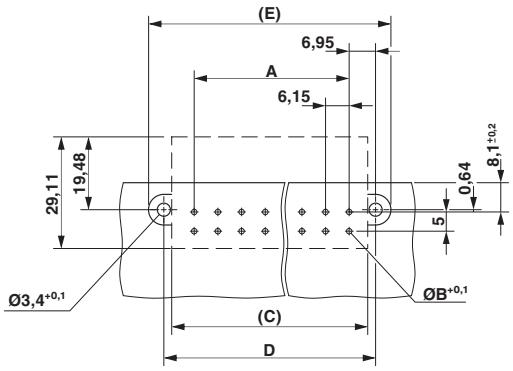

Maß	Teilung /pitch	
	8	10
A	(7x6,15=)43,05	(9x6,15=)55,35
B	Ø1,3+0,1 (16x)	Ø1,3+0,1 (20x)
C	53,6	65,9
D	57,7	70
E	65,7	78

Drilling diagram

Circuit diagram

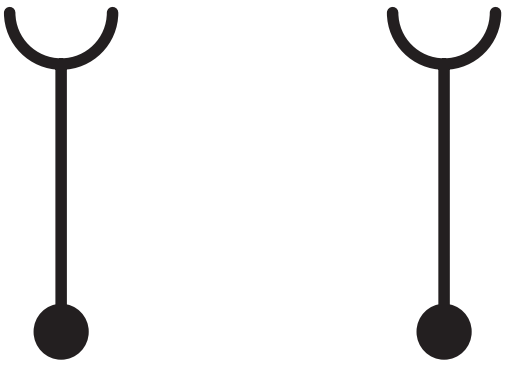

Circuit diagram

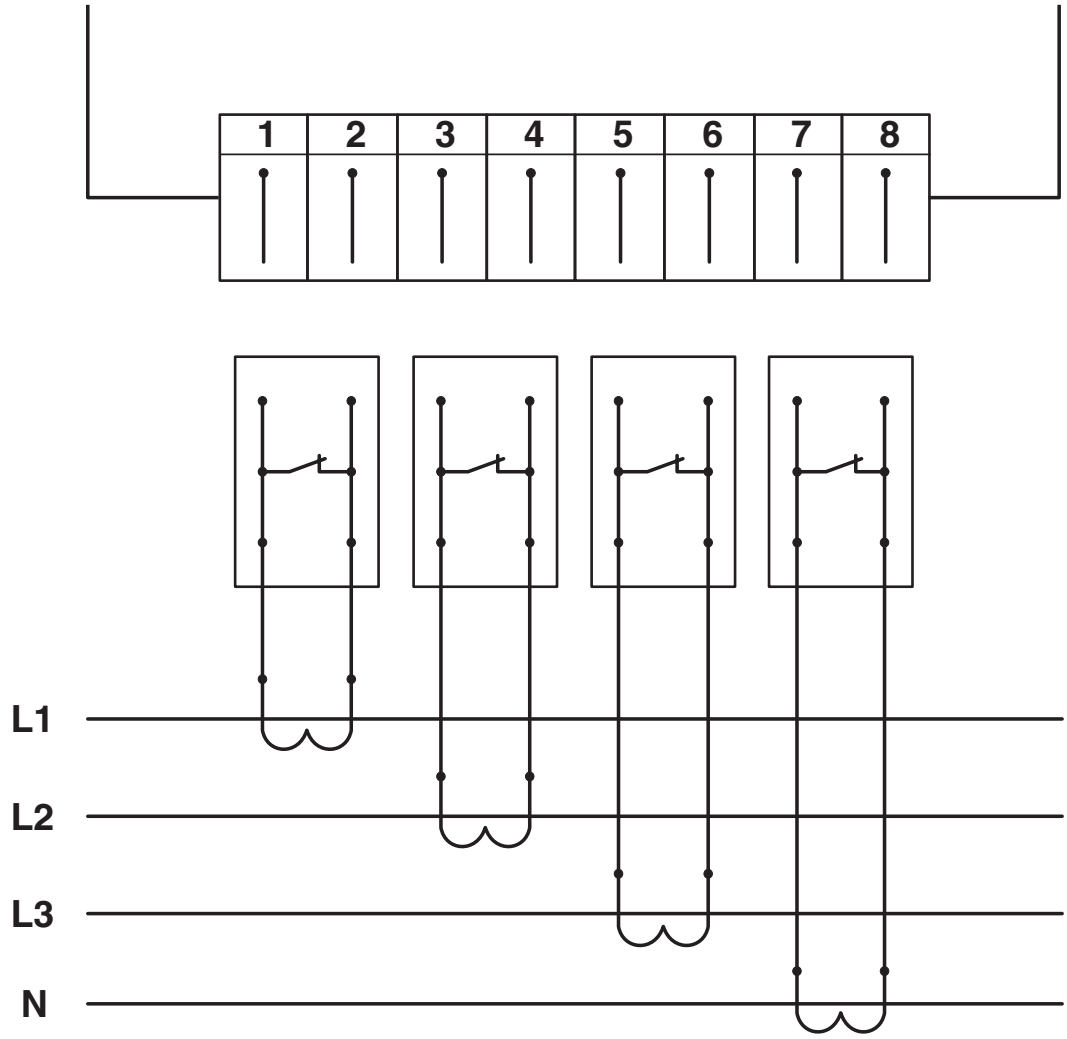

In conjunction with the UP 4-CUS/4CT connector

Circuit diagram

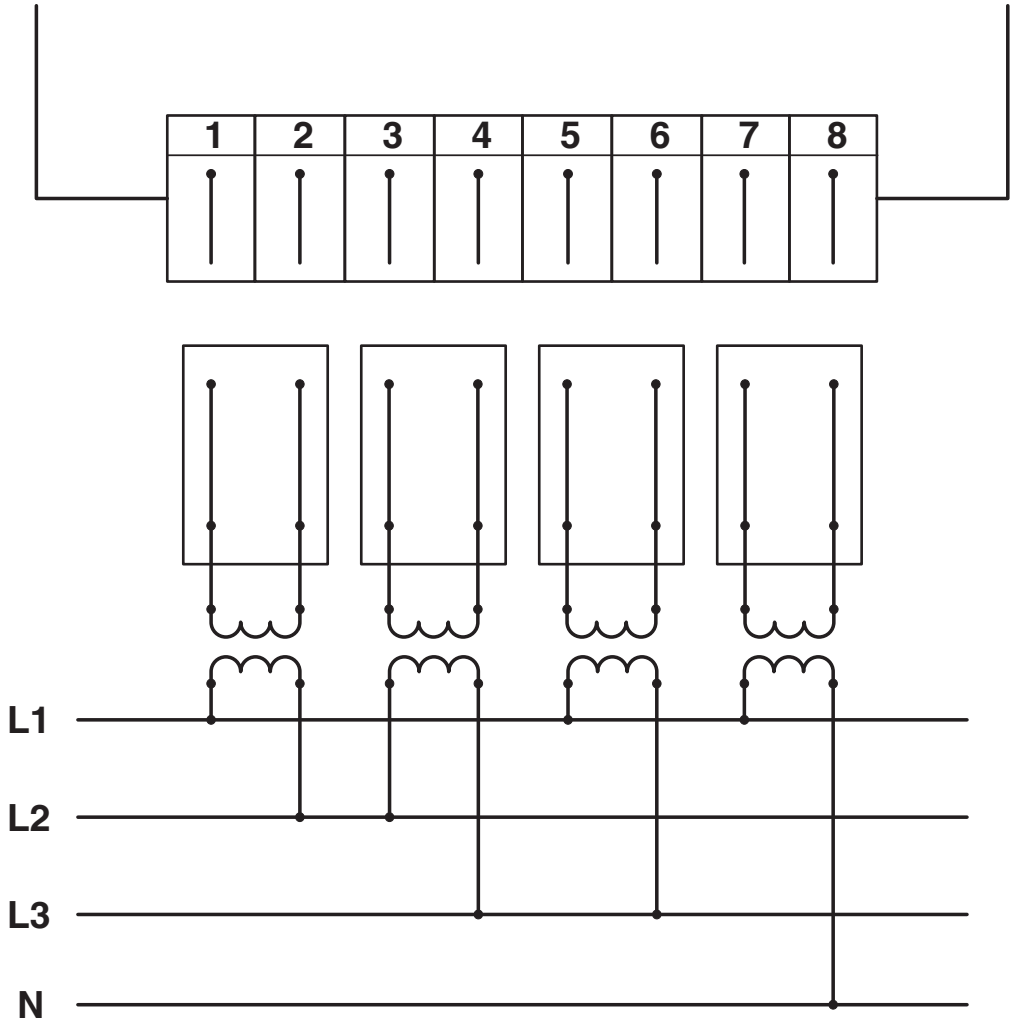

In conjunction with the UP 4-CUS/4VT connector

Approvals

To download certificates, visit the product detail page: https://www.phoenixcontact.com/us/products/3208694

CSA
Approval ID: 13631

	Nominal voltage U_N	Nominal current I_N	Cross section AWG	Cross section mm^2
D				
	300 V	10 A	26 - 10	-

cULus Recognized
Approval ID: E60425

	Nominal voltage U_N	Nominal current I_N	Cross section AWG	Cross section mm^2
F				
	320 V	15 A	-	-
D				
	300 V	10 A	-	-

Classifications

ECLASS

ECLASS-13.0	27250301
ECLASS-15.0	27250301

ETIM

ETIM 10.0	EC000886

UNSPSC

UNSPSC 21.0	39121400

Environmental product compliance

EU RoHS

Fulfills EU RoHS substance requirements	Yes, No exemptions

China RoHS

Environment friendly use period (EFUP)	EFUP-E
	No hazardous substances above the limits

EU REACH SVHC

REACH candidate substance (CAS No.)	No substance above 0.1 wt%

EF3.1 Climate Change

CO2e kg	0.171 kg CO2e

Phoenix Contact 2026 © - all rights reserved
https://www.phoenixcontact.com

Phoenix Contact USA
586 Fulling Mill Road
Middletown, PA 17057, United States
(+717) 944-1300
info@phoenixcon.com