UW 16-POT - Panel feed-through terminal block

3073487

https://www.phoenixcontact.com/us/products/3073487

Please be informed that the data shown in this PDF document is generated from our online catalog. Please find the complete data in the user documentation. Our general terms of use for downloads are valid.





Panel feed-through terminal block, connection method: Screw connection with tension sleeve, Cable lug connection, number of positions: 1, load current: 76 A, cross section: 6 mm^2 - 25 mm^2, connection direction of the conductor to plug-in direction: 0 °, width: 12.1 mm, color: gray

Your advantages

- Well-known connection principle allows worldwide use
- Low temperature rise, thanks to maximum contact force
- Tool-free snap-in principle enables easy mounting on the device panel
- Automatic panel thickness compensation enables universal use
- Reliable seal even with low-viscosity molding compounds

Commercial data

Item number	3073487
Packing unit	50 pc
Minimum order quantity	50 pc
Sales key	AA28
Product key	AA1DDB
GTIN	4046356344654
Weight per piece (including packing)	29.06 g
Weight per piece (excluding packing)	26.02 g
Customs tariff number	85369010
Country of origin	CN

Technical data

Product properties

Product type	Panel feed-through terminal block
Product family	UW 16-POT
Number of positions	1
Pitch	12.1 mm
Number of connections	2
Number of rows	1
Number of potentials	1

Insulation characteristics

Overvoltage category	III
Degree of pollution	3

Fitting of components

Partial assembly	No

Electrical properties

Properties

Nominal current I_N	76 A
Nominal voltage U_N	500 V
Rated voltage (III/3)	500 V
Rated surge voltage (III/3)	6 kV

Connection data

Connection technology

Connector system	UW 16 / PW 16
Nominal cross section	16 mm²

Conductor connection exterior

Connection method	Screw connection with tension sleeve
Connection direction of the conductor to plug-in direction	0 °
Conductor cross-section rigid	6 mm² ... 25 mm²
Conductor cross-section flexible	6 mm² ... 16 mm²
Conductor cross-section, flexible, with ferrule, without plastic sleeve	6 mm² ... 16 mm²
Conductor cross-section, flexible, with ferrule, with plastic sleeve	6 mm² ... 16 mm²
2 conductors with same cross section, rigid	2.5 mm² ... 10 mm²
2 conductors with same cross section, flexible	2.5 mm² ... 6 mm²
2 conductors with same cross section, flexible, with ferrule without plastic sleeve	4 mm² ... 6 mm²
2 conductors with the same cross section, flexible, with TWIN ferrule with plastic sleeve	4 mm² ... 6 mm²
Internal cylindrical gage	B7

Stripping length	16 mm
Tightening torque	2 Nm ... 2.3 Nm

Conductor connection interior

Connection method	Cable lug connection
Connection direction of the conductor to plug-in direction	0 °

Mounting

Panel thickness	1 mm...6 mm

Material specifications

Material data - contact

Note	WEEE/RoHS-compliant, free of whiskers according to IEC 60068-2-82/JEDEC JESD 201
Contact material	Cu alloy
Surface characteristics	tin-plated

Material data - housing

Color (Housing)	gray (7042)
Insulating material	PA
Insulating material group	I
CTI according to IEC 60112	600
Flammability rating according to UL 94	V0
Glow wire flammability index GWFI according to EN 60695-2-12	850
Glow wire ignition temperature GWIT according to EN 60695-2-13	775
Temperature for the ball pressure test according to EN 60695-10-2	125 °C

Notes

Safety note

Safety note	• Only electrically qualified personnel may install and operate the product. To recognize and prevent danger, the qualified personnel must be familiar with the basics of electrical engineering.
	• Observe the technical data provided here and refer to the documents listed under “Downloads”. The download area contains important information, such as installation notes, technical drawings, and 3D data.
	• The cable entry funnel is not safe to touch. Never connect or disconnect the terminal when it is energized. Take appropriate steps to ensure touch protection.
	• To maintain the nominal voltage, align the cable lugs straight and centered, and cast the terminals on the inside.

Dimensions

Dimensional drawing	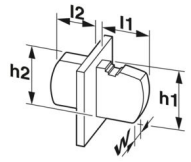
Pitch	12.1 mm
	12.1 mm
Width [w]	12.1 mm

External dimensions

Height [h1]	41.11 mm
Length [l1]	36.83 mm

Internal dimensions

Height [h2]	26 mm
Length [l2]	23.65 mm

Mechanical tests

Test for conductor damage and slackening

Specification	IEC 60947-7-1:2009-04
Result	Test passed

Pull-out test

Specification	IEC 60947-7-1:2009-04
Conductor cross-section/conductor type/tractive force setpoint/actual value	6 mm² / solid / > 80 N
	6 mm² / flexible / > 80 N
	25 mm² / stranded / > 135 N
	16 mm² / flexible / > 100 N

Electrical tests

Temperature-rise test

Specification	IEC 60947-7-1:2009-04
Requirement temperature-rise test	Increase in temperature ≤ 45 K

Short-time withstand current

Specification	IEC 60947-7-1:2009-04

Air clearances and creepage distances | 1. Insulation coordination

Application	without spacer plate
Specification	IEC 60947-7-1:2009-04
Insulating material group	I
Comparative tracking index (IEC 60112)	CTI 600
Rated insulation voltage (III/3)	500 V
Rated surge voltage (III/3)	6 kV
minimum clearance value - non-homogenous field (III/3)	5.5 mm

minimum creepage distance (III/3)	6.3 mm

Air clearances and creepage distances | 2. Insulation coordination

Application	with spacer plate
Specification	IEC 60947-7-1:2009-04
Insulating material group	I
Comparative tracking index (IEC 60112)	CTI 600
Rated insulation voltage (III/3)	800 V
Rated surge voltage (III/3)	8 kV
minimum clearance value - non-homogenous field (III/3)	8 mm
minimum creepage distance (III/3)	10 mm

Environmental and real-life conditions

Vibration test

Specification	IEC 60068-2-6:2007-12
Frequency	10 - 150 - 10 Hz
Sweep speed	1 octave/min
Amplitude	0.35 mm (10 Hz ... 60.1 Hz)
Acceleration	5g (60.1 Hz ... 150 Hz)
Test duration per axis	2.5 h
Test directions	X-, Y- and Z-axis

Shocks

Specification	IEC 60068-2-27:2008-02
Pulse shape	Semi-sinusoidal
Acceleration	30g
Shock duration	18 ms
Test directions	X-, Y- and Z-axis (pos. and neg.)

Glow-wire test

Specification	IEC 60695-2-11:2014-02
Temperature	960 °C
Time of exposure	30 s

Ambient conditions

Ambient temperature (storage/transport)	-40 °C ... 70 °C
Relative humidity (storage/transport)	30 % ... 70 %
Ambient temperature (assembly)	-5 °C ... 100 °C
Ambient temperature (operation)	-40 °C ... 105 °C (Depending on the current carrying capacity/derating curve)

Ambient conditions

Ambient temperature (operation)	-40 °C ... 105 °C (Depending on the current carrying capacity/derating curve)
Ambient temperature (storage/transport)	-40 °C ... 70 °C
Relative humidity (storage/transport)	30 % ... 70 %

Ambient temperature (assembly)	-5 °C ... 100 °C

Packaging specifications

Type of packaging	packed in cardboard

Drawings

Dimensional drawing

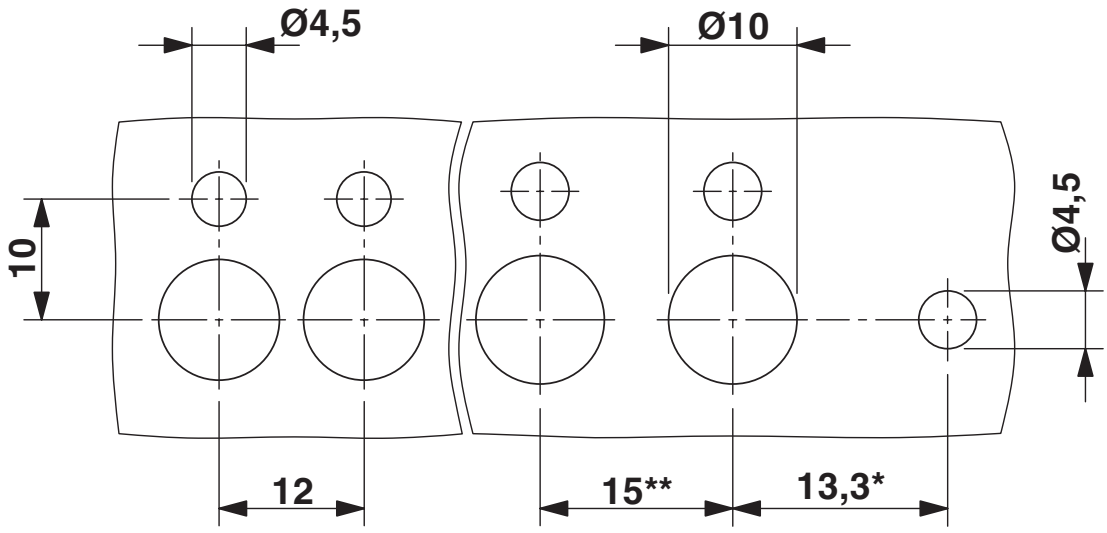

* Only when using the UW...-F flange plate

** Dimensions when using the DP-UW... spacer plate

Dimensional drawing

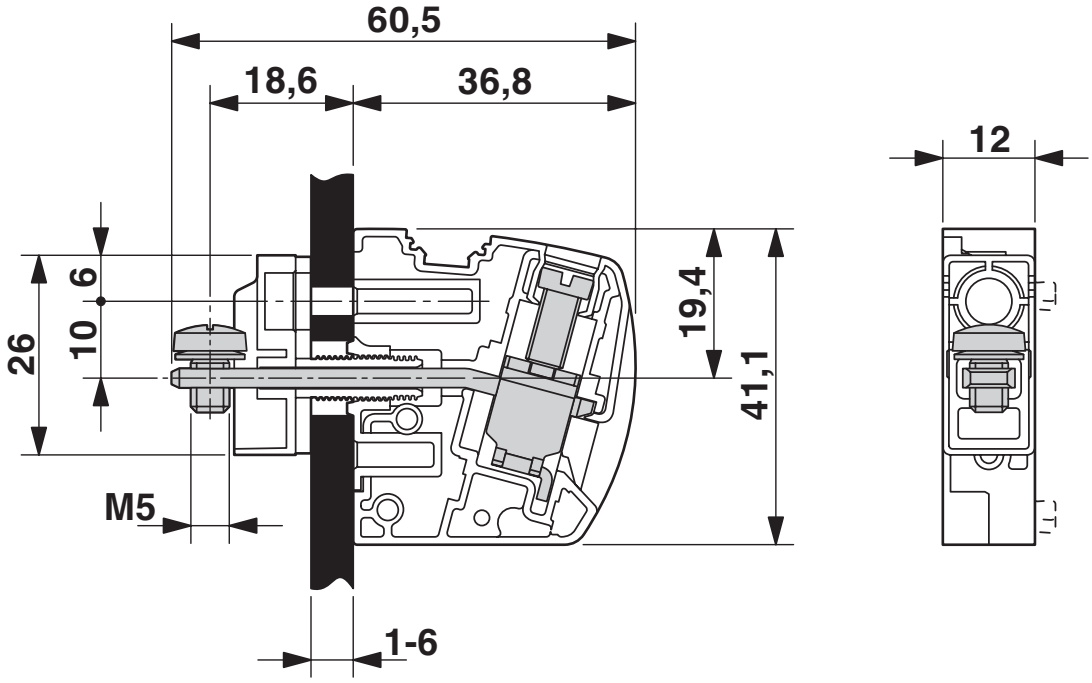

Diagram

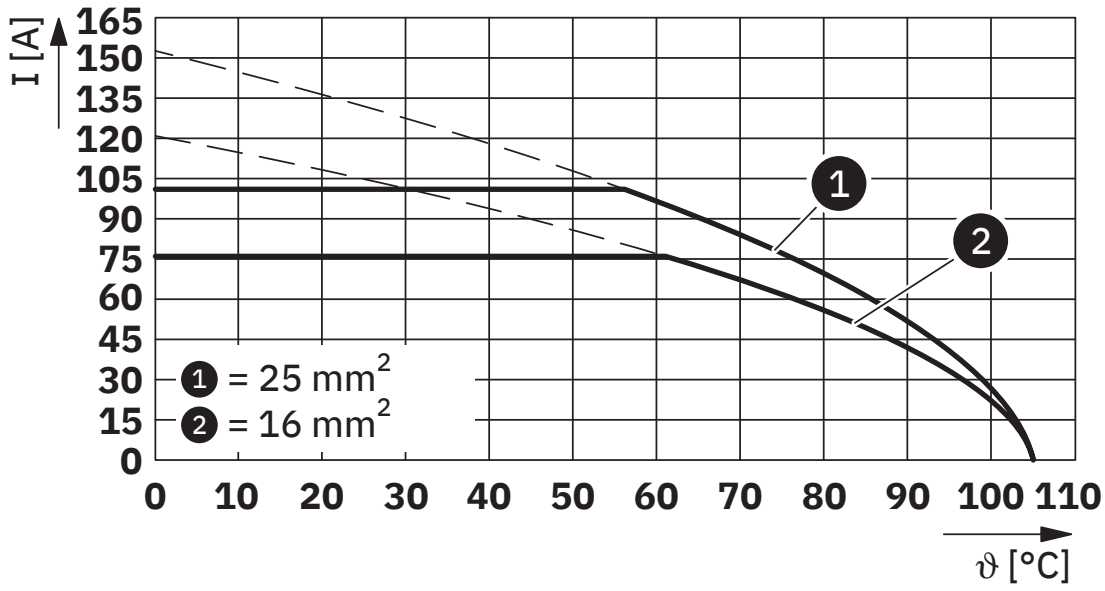

Type: UW 16-POT

Approvals

To download certificates, visit the product detail page: https://www.phoenixcontact.com/us/products/3073487

CSA
Approval ID: 13631

	Nominal voltage U_N	Nominal current I_N	Cross section AWG	Cross section mm^2
B				
	600 V	80 A	10 - 4	-
C				
	600 V	80 A	10 - 4	-

UL Recognized
Approval ID: E60425-20100423

	Nominal voltage U_N	Nominal current I_N	Cross section AWG	Cross section mm^2
B				
	600 V	85 A	10 - 4	-
C				
	600 V	85 A	10 - 4	-

Classifications

ECLASS

ECLASS-13.0	27141134
ECLASS-15.0	27141134

ETIM

ETIM 10.0	EC001283

UNSPSC

UNSPSC 21.0	39121400

Environmental product compliance

EU RoHS

Fulfills EU RoHS substance requirements	Yes, No exemptions

China RoHS

Environment friendly use period (EFUP)	EFUP-E
	No hazardous substances above the limits

EU REACH SVHC

REACH candidate substance (CAS No.)	No substance above 0.1 wt%

Phoenix Contact 2026 © - all rights reserved
https://www.phoenixcontact.com

Phoenix Contact USA
586 Fulling Mill Road
Middletown, PA 17057, United States
(+717) 944-1300
info@phoenixcon.com