CGSA 50 - Cable guiding system

3071401

https://www.phoenixcontact.com/us/products/3071401

Please be informed that the data shown in this PDF document is generated from our online catalog. Please find the complete data in the user documentation. Our general terms of use for downloads are valid.



Cable guiding system, with swivel joint for opening, depth: 140.5 mm, width: 68 mm, height: 218 mm, diameter: 42 mm, color: gray

Your advantages

- Subsequent wiring is easy, thanks to swivel joint openings that can be operated without tools
- Easily plan cable harnesses: the cable length is predefined through the swivel arm
- Integrated flanges with strain relief make assembly quick and easy
- Mechanical cable protection and bundling, thanks to protective covers that can be attached without tools
- Route preassembled cables and wires easily, thanks to the patent-pending swivel joint
- High-grade elastic and mechanically resilient plastic, certified according to UL 94 for flammability rating: V0
- Cable routing for the control cabinet door can be planned in the CAD system, thanks to the defined installation space and swivel range

Commercial data

Item number	3071401
Packing unit	1 pc
Minimum order quantity	1 pc
Sales key	BE06
Product key	BE61ZX
GTIN	4055626289175
Weight per piece (including packing)	432.5 g
Weight per piece (excluding packing)	429.7 g
Customs tariff number	39259020
Country of origin	PL

Technical data

Notes

General	Cable binders can be used up to a width of 4 mm and from a length of 40 mm

Product properties

Product type	Cable feed-through
Number of cables	100 for 1.5 mm²

Dimensions

Dimensional drawing	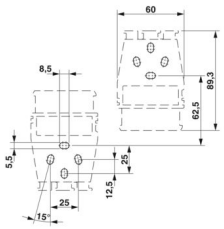
Width	68 mm
Height	218 mm
Depth	140.5 mm
Cable length	700 mm ... 460 mm
Drill hole distance, horizontal	25 mm
Drill hole distance, vertical	25 mm
Diameter	42 mm
Hole diameter	5.5 mm

Material specifications

Color	gray (RAL 7042)
Material	PC
Flammability rating according to UL 94	V0
Static insulating material application in cold	-40 °C
Relative insulation material temperature index (Elec., UL 746 B)	130 °C
Fire protection for rail vehicles (DIN EN 45545-2) R22	HL 1 - HL 3
Fire protection for rail vehicles (DIN EN 45545-2) R23	HL 1 - HL 3
Fire protection for rail vehicles (DIN EN 45545-2) R24	HL 1 - HL 3
Components	halogen-free

Environmental and real-life conditions

Needle-flame test

Time of exposure	30 s
Result	Test passed

Ambient conditions

Ambient temperature (operation)	-60 °C ... 85 °C (max. short-term operating temperature RTI Elec.)
Ambient temperature (storage/transport)	-25 °C ... 55 °C (for a short time, not exceeding 24 h, -60 °C to +70 °C)
Ambient temperature (assembly)	-5 °C ... 70 °C
Ambient temperature (actuation)	-5 °C ... 70 °C
Permissible humidity (storage/transport)	30 % ... 70 %

Drawings

Dimensional drawing

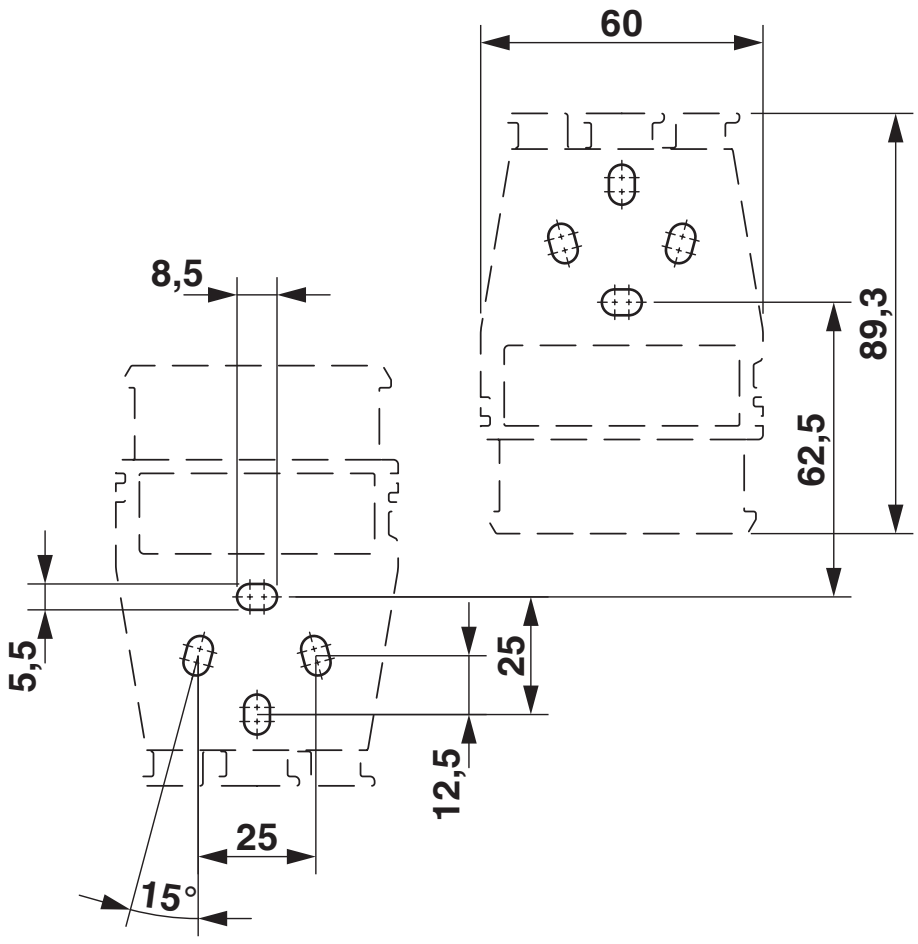

Dimensional drawing

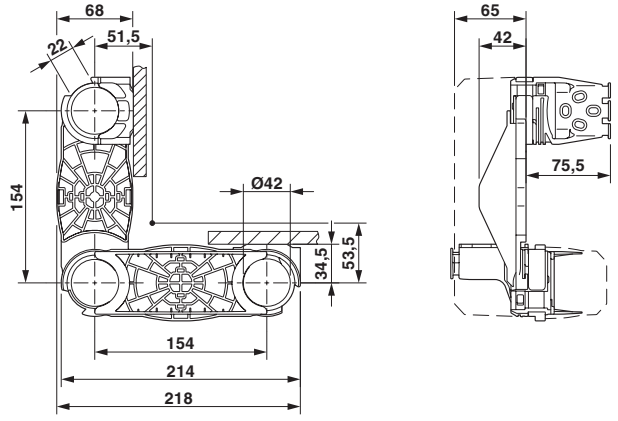

Dimensional drawing

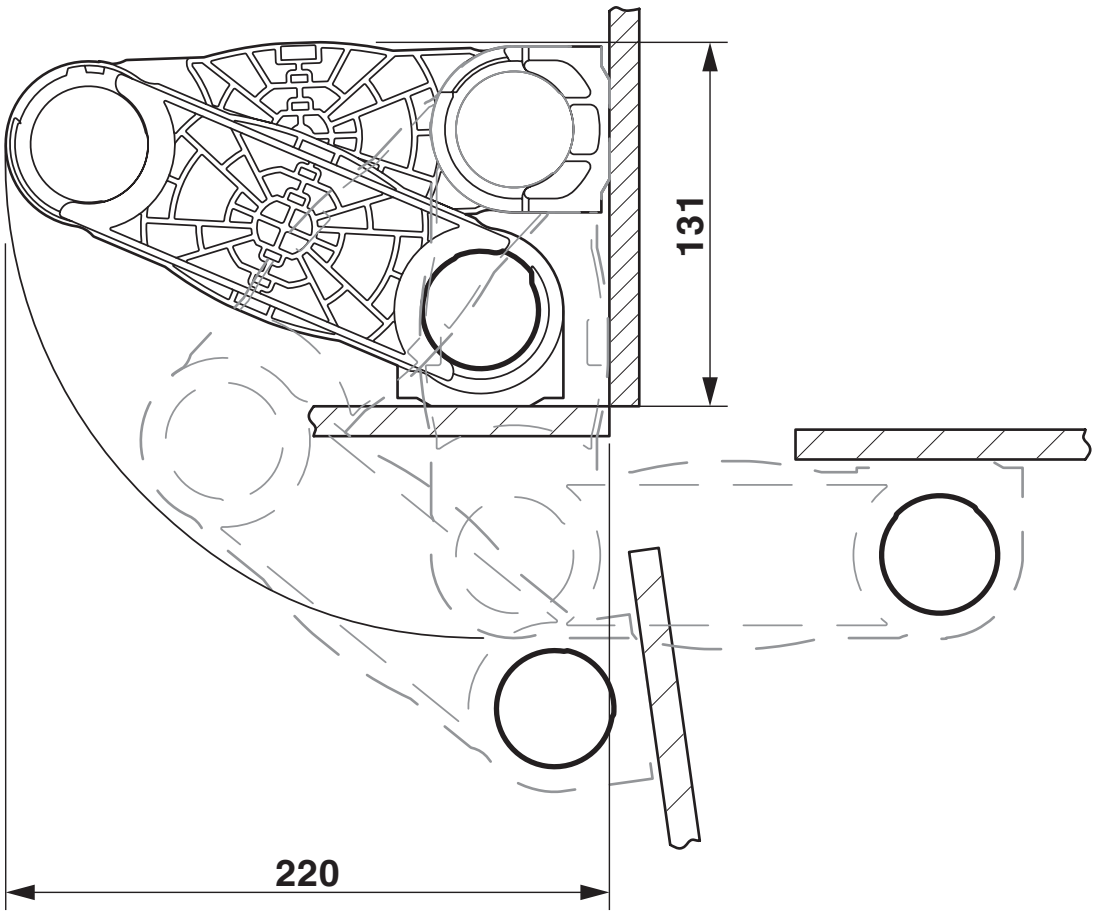

Dimensional drawing

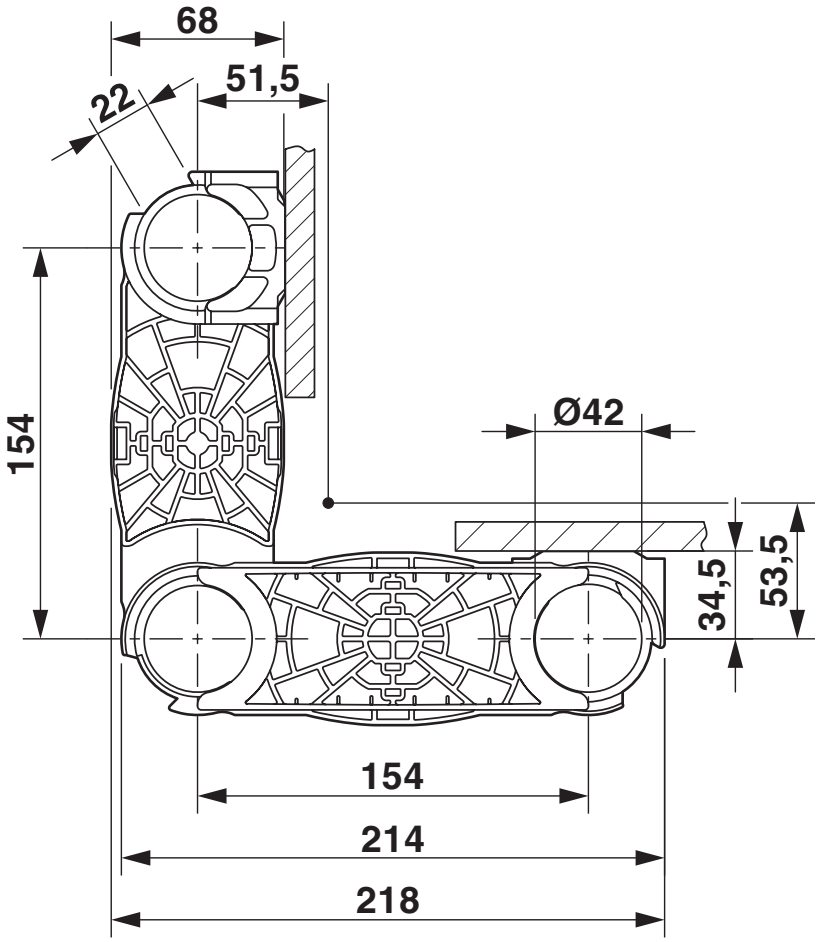

Approvals

To download certificates, visit the product detail page: https://www.phoenixcontact.com/us/products/3071401

VDE Zeichengenehmigung
Approval ID: 40047466

Classifications

ECLASS

ECLASS-13.0	27182811
ECLASS-15.0	27182811

ETIM

ETIM 10.0	EC002620

UNSPSC

UNSPSC 21.0	39121700

Environmental product compliance

EU RoHS

Fulfills EU RoHS substance requirements	Yes, No exemptions

China RoHS

Environment friendly use period (EFUP)	EFUP-E
	No hazardous substances above the limits

EU REACH SVHC

REACH candidate substance (CAS No.)	No substance above 0.1 wt%

EF3.1 Climate Change

CO2e kg	1.759 kg CO2e

Phoenix Contact 2026 © - all rights reserved
https://www.phoenixcontact.com

Phoenix Contact USA
586 Fulling Mill Road
Middletown, PA 17057, United States
(+717) 944-1300
info@phoenixcon.com