FTPR-3/9S - Test plug

3069969

https://www.phoenixcontact.com/us/products/3069969

Please be informed that the data shown in this PDF document is generated from our online catalog. Please find the complete data in the user documentation. Our general terms of use for downloads are valid.



Test plug, With twist grip, nom. voltage: 400 V, nominal current: 20 A, number of positions: 9, Rated cross section: 2.5 mm^2, color: gray



Your advantages

- Easy and time saving, thanks to functional grouping of switching operations
- Cost-effective, thanks to the tailored, modular design and use of standardized CLIPLINE complete accessories
- Space saving, thanks to offset test socket arrangement
- Safe, thanks to guided operation with patented twist grip
- The integrated, robust switch contact is designed for the most stringent demands, and the use of high-quality materials ensures the transmission of signal currents, even after multiple actuations
- The automatically generated transformer short circuit and the shock-proof design ensure the highest degree of safety during measurement
- Maximum safety with leading and automatic transformer short circuit

Commercial data

Item number	3069969
Packing unit	1 pc
Minimum order quantity	1 pc
Sales key	BE06
Product key	BE6113
GTIN	4055626273716
Weight per piece (including packing)	515.5 g
Weight per piece (excluding packing)	515.5 g
Customs tariff number	85366990
Country of origin	DE

Technical data

Product properties

Product type	Test plug terminal block
Product family	FAME 3
Number of positions	9
Pitch	8.2 mm
Potentials	9

Electrical properties

Maximum power dissipation for nominal condition	1.31 W

Connection data

Nominal cross section	6 mm²
Test socket torque	0.5
Note	The conductor cross-section depends on the cable lug used
Conductor cross-section flexible	0.5 mm² ... 2.5 mm²
Conductor cross-section, flexible [AWG]	20 ... 14 (converted acc. to IEC)
Nominal cross section	2.5 mm²
Nominal current	20 A
Maximum load current	20 A
Nominal voltage	400 V AC/DC

Dimensions

Dimensional drawing	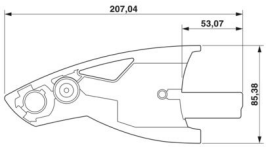
Width	105.1 mm
Height	86 mm
Pitch	8.2 mm

Material specifications

Color	gray (RAL 7042)
Flammability rating according to UL 94	V0
Insulating material	PA
Static insulating material application in cold	-60 °C
Temperature index of insulation material (DIN EN 60216-1 (VDE 0304-21))	125 °C
Relative insulation material temperature index (Elec., UL 746 B)	130 °C
Fire protection for rail vehicles (DIN EN 45545-2) R22	HL 1 - HL 3
Fire protection for rail vehicles (DIN EN 45545-2) R23	HL 1 - HL 3
Fire protection for rail vehicles (DIN EN 45545-2) R24	HL 1 - HL 3

Fire protection for rail vehicles (DIN EN 45545-2) R26	HL 1 - HL 3
Calorimetric heat release NFPA 130 (ASTM E 1354)	27,5 MJ/kg
Surface flammability NFPA 130 (ASTM E 162)	passed
Specific optical density of smoke NFPA 130 (ASTM E 662)	passed
Smoke gas toxicity NFPA 130 (SMP 800C)	passed

Environmental and real-life conditions

Ambient conditions

Ambient temperature (storage/transport)	-25 °C ... 60 °C (for a short time, not exceeding 24 h, -60 °C to +70 °C)
Ambient temperature (assembly)	-5 °C ... 70 °C
Ambient temperature (actuation)	-5 °C ... 70 °C
Permissible humidity (storage/transport)	30 % ... 70 %

Drawings

Dimensional drawing

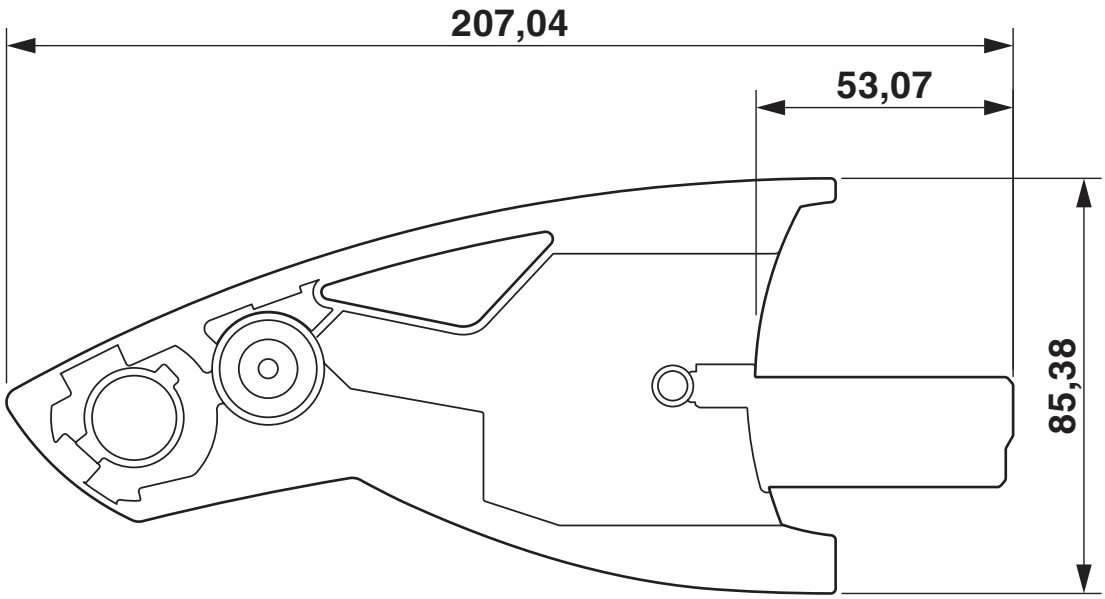

Circuit diagram

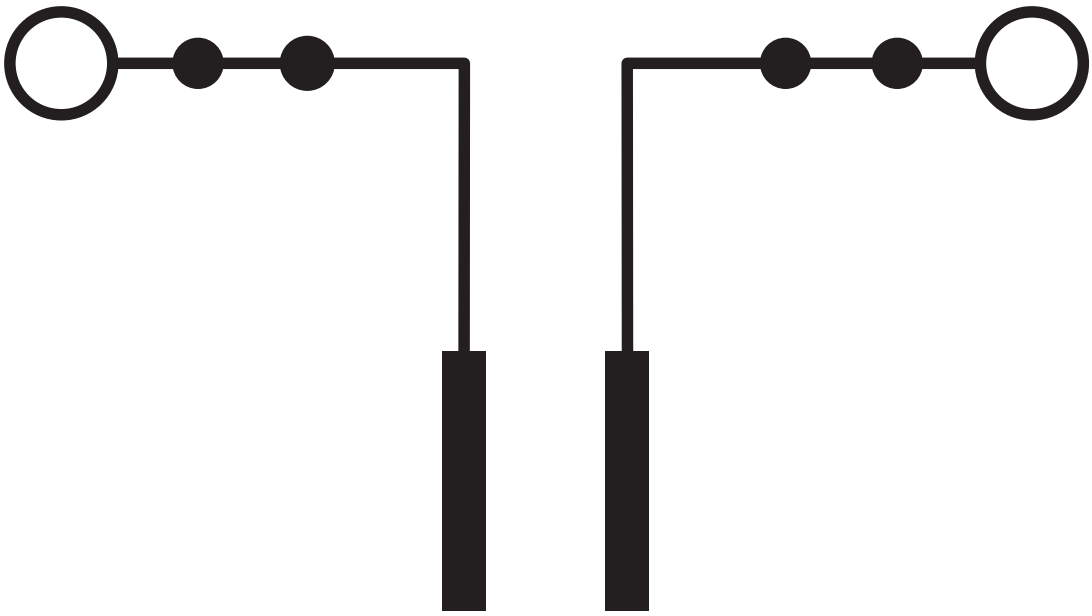

Approvals

To download certificates, visit the product detail page: https://www.phoenixcontact.com/us/products/3069969

cULus Recognized
Approval ID: E60425

	Nominal voltage U_N	Nominal current I_N	Cross section AWG	Cross section mm^2
B				
	300 V	31 A	-	-
C				
	300 V	31 A	-	-
F				
	690 V	31 A	-	-
D				
	600 V	5 A	-	-

CSA
Approval ID: 13631

	Nominal voltage U_N	Nominal current I_N	Cross section AWG	Cross section mm^2
B				
	300 V	31 A	-	-
C				
	300 V	31 A	-	-
D				
	600 V	5 A	-	-

Classifications

ECLASS

ECLASS-13.0	27250304
ECLASS-15.0	27250304

ETIM

ETIM 10.0	EC002555

UNSPSC

UNSPSC 21.0	20122000

Environmental product compliance

EU RoHS

Fulfills EU RoHS substance requirements	Yes
Exemption	6(c)

China RoHS

Environment friendly use period (EFUP)	EFUP-50
	An article-related China RoHS declaration table can be found in the download area for the respective article under "Manufacturer declaration". For all articles with EFUP-E, no China RoHS declaration table issued and required.

EU REACH SVHC

REACH candidate substance (CAS No.)	Lead(CAS: 7439-92-1)
SCIP	6ada46e3-3ef8-4e00-b44f-4e3d2b2efce1

Phoenix Contact 2026 © - all rights reserved
https://www.phoenixcontact.com

Phoenix Contact USA
586 Fulling Mill Road
Middletown, PA 17057, United States
(+717) 944-1300
info@phoenixcon.com