PTWE 6-2/10 - Plug-in test socket

3069833

https://www.phoenixcontact.com/us/products/3069833

Please be informed that the data shown in this PDF document is generated from our online catalog. Please find the complete data in the user documentation. Our general terms of use for downloads are valid.





Plug-in test socket, nom. voltage: 400 V, number of connections: 20, number of positions: 10, connection method: Push-in connection, Rated cross section: 6 mm^2, 1 level, cross section: 0.5 mm^2 - 10 mm^2, mounting type: Panel mounting, color: gray

Your advantages

- Space saving, thanks to compact, modular plug-in test sockets
- Cost-effective, thanks to the tailored, modular design and use of standardized CLIPLINE complete accessories
- The integrated, robust switch contact is designed for the most stringent demands, and the use of high-quality materials ensures the transmission of signal currents, even after multiple actuations
- Maximum safety with leading and automatic transformer short circuit

Commercial data

Item number	3069833
Packing unit	1 pc
Minimum order quantity	1 pc
Sales key	BE06
Product key	BE6112
GTIN	4046356962131
Weight per piece (including packing)	312.9 g
Weight per piece (excluding packing)	312.9 g
Customs tariff number	85369010
Country of origin	PL

Technical data

Product properties

Product type	Test terminal strip
Product family	FAME 2
Number of positions	10
Pitch	8.2 mm
Number of connections	20
Number of rows	1
Potentials	10

Insulation characteristics

Overvoltage category	III

Electrical properties

Rated surge voltage	4 kV
Maximum power dissipation for nominal condition	1.31 W
Test surge voltage	5 kV

Connection data

Number of connections per level	20
Nominal cross section	6 mm²

1 level

Connection method	Push-in connection
Stripping length	12 mm
Internal cylindrical gage	A5
Connection in acc. with standard	IEC 60947-7-1
Conductor cross-section rigid	0.5 mm² ... 10 mm²
Cross section AWG	20 ... 8 (converted acc. to IEC)
Conductor cross-section flexible	0.5 mm² ... 6 mm²
Conductor cross-section, flexible [AWG]	20 ... 10 (converted acc. to IEC)
Conductor cross-section flexible (ferrule without plastic sleeve)	0.5 mm² ... 6 mm²
Flexible conductor cross-section (ferrule with plastic sleeve)	0.5 mm² ... 6 mm²
2 conductors with the same cross section, flexible, with TWIN ferrule with plastic sleeve	0.5 mm² ... 1.5 mm²
Nominal cross section	6 mm²
Maximum load current	30 A (with 6 mm² conductor cross-section)
Nominal voltage	400 V AC/DC

1 level Connection cross sections directly pluggable

Conductor cross-section rigid	1 mm² ... 10 mm²
Conductor cross-section flexible (ferrule without plastic sleeve)	1 mm² ... 6 mm²
Flexible conductor cross-section (ferrule with plastic sleeve)	1 mm² ... 6 mm²

Dimensions

Dimensional drawing	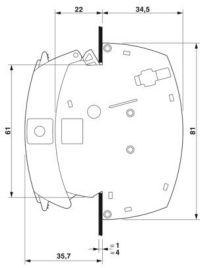
Width	114.8 mm
Height	81 mm
Depth	56.5 mm
Pitch	8.2 mm
Plate thickness	1 mm ... 4 mm

Material specifications

Color	gray (RAL 7042)
Flammability rating according to UL 94	V0
Insulating material group	I
Insulating material	PA
Static insulating material application in cold	-60 °C
Temperature index of insulation material (DIN EN 60216-1 (VDE 0304-21))	125 °C
Relative insulation material temperature index (Elec., UL 746 B)	130 °C
Fire protection for rail vehicles (DIN EN 45545-2) R22	HL 1 - HL 3
Fire protection for rail vehicles (DIN EN 45545-2) R23	HL 1 - HL 3
Fire protection for rail vehicles (DIN EN 45545-2) R24	HL 1 - HL 3
Fire protection for rail vehicles (DIN EN 45545-2) R26	HL 1 - HL 3
Calorimetric heat release NFPA 130 (ASTM E 1354)	27,5 MJ/kg
Surface flammability NFPA 130 (ASTM E 162)	passed
Specific optical density of smoke NFPA 130 (ASTM E 662)	passed
Smoke gas toxicity NFPA 130 (SMP 800C)	passed

Electrical tests

Surge voltage test

Test voltage setpoint	4.8 kV
Result	Test passed

Temperature-rise test

Requirement temperature-rise test	Increase in temperature ≤ 45 K
Result	Test passed
Short-time withstand current 4 mm²	0.5 kA
	0.3 kA

	0.15 kA
Result	Test passed

Power-frequency withstand voltage

Test voltage setpoint	1.89 kV
Result	Test passed

Mechanical properties

General

Terminal block mounting	0.8 Nm ... 1 Nm

Mechanical data

Open side panel	No

Mechanical tests

Mechanical strength

Result	Test passed

Attachment on the carrier

Test force setpoint	5 N
Result	Test passed
Note	Dimensions panel cutout see appendix.

Test for conductor damage and slackening

Rotation speed	10 rpm
Revolutions	135
Conductor cross-section/weight	0.5 mm² / 0.3 kg
	6 mm² / 1.4 kg
	10 mm² / 2 kg
Result	Test passed

Environmental and real-life conditions

Aging

Temperature cycles	192
Result	Test passed

Needle-flame test

Time of exposure	30 s
Result	Test passed

Oscillation/broadband noise

Specification	DIN EN 50155 (VDE 0115-200):2008-03
Spectrum	Long life test category 2, bogie-mounted
Frequency	f_1 = 5 Hz to f_2 = 250 Hz
ASD level	6.12 (m/s²)²/Hz
Acceleration	3.12g

Test duration per axis	5 h
Test directions	X-, Y- and Z-axis
Result	Test passed

Shocks

Specification	DIN EN 50155 (VDE 0115-200):2008-03
Pulse shape	Half-sine
Acceleration	30g
Shock duration	18 ms
Number of shocks per direction	3
Test directions	X-, Y- and Z-axis (pos. and neg.)
Result	Test passed

Ambient conditions

Ambient temperature (storage/transport)	-25 °C ... 60 °C (for a short time, not exceeding 24 h, -60 °C to +70 °C)
Ambient temperature (assembly)	-5 °C ... 70 °C
Ambient temperature (actuation)	-5 °C ... 70 °C
Permissible humidity (storage/transport)	30 % ... 70 %

Standards and regulations

Connection in acc. with standard	IEC 60947-7-1

Mounting

Mounting type	Panel mounting
Terminal block mounting	0.8 Nm ... 1 Nm

Drawings

Dimensional drawing

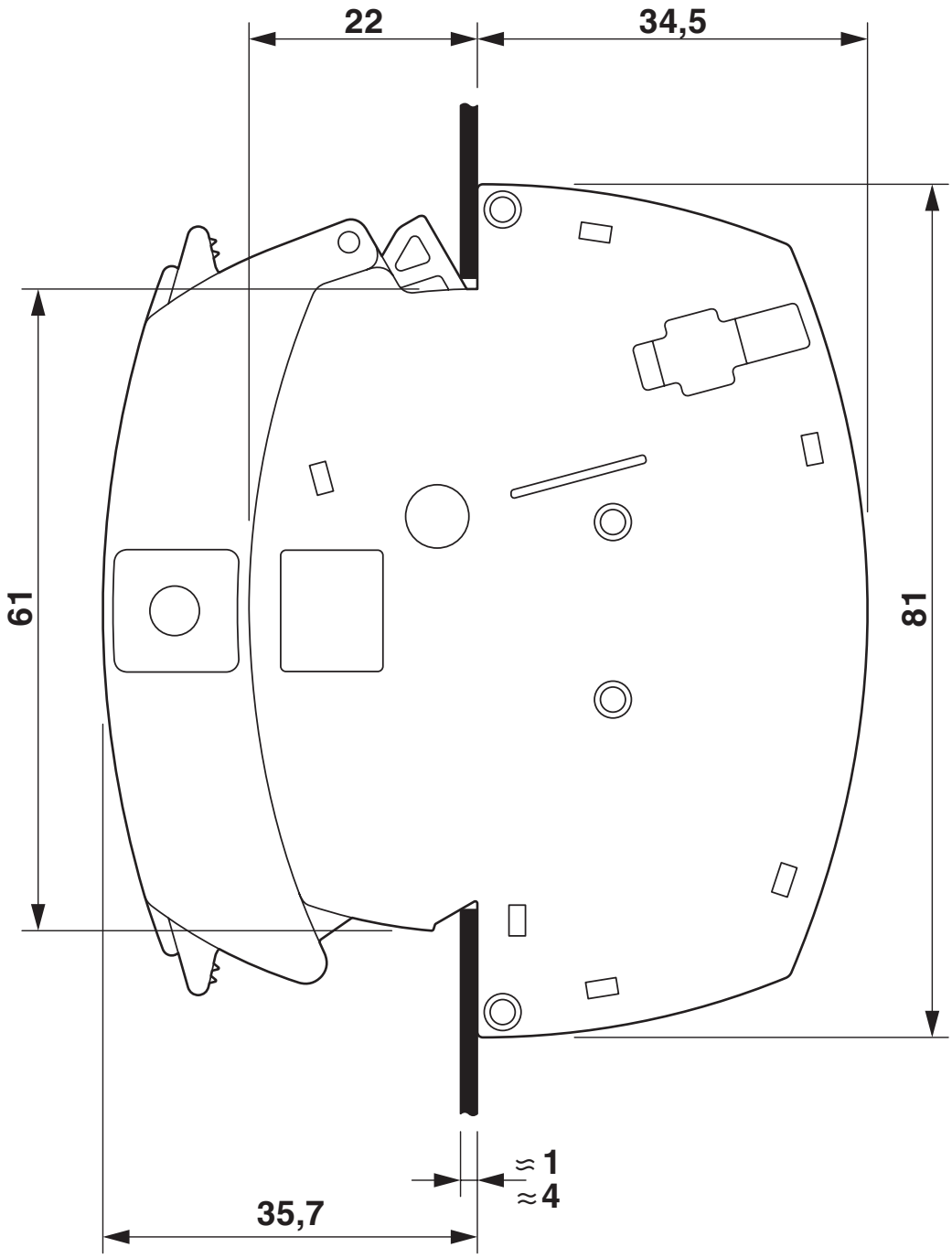

Dimensional drawing

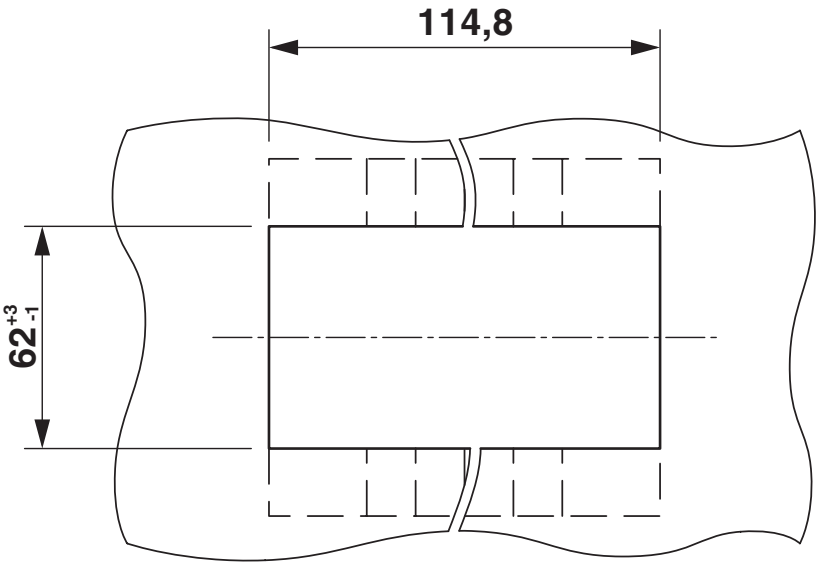

Circuit diagram

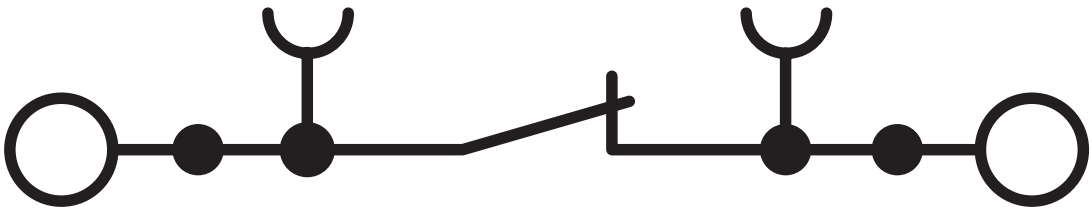

Approvals

To download certificates, visit the product detail page: https://www.phoenixcontact.com/us/products/3069833

CSA
Approval ID: 13631

	Nominal voltage U_N	Nominal current I_N	Cross section AWG	Cross section mm^2
B				
	300 V	20 A	20 - 8	-
C				
	300 V	20 A	20 - 8	-
D				
	600 V	5 A	20 - 8	-

EAC
Approval ID: RU C-DE.BL08.B.00682

cULus Recognized
Approval ID: E60425

	Nominal voltage U_N	Nominal current I_N	Cross section AWG	Cross section mm^2
B				
	300 V	20 A	20 - 8	-
C				
	300 V	20 A	20 - 8	-
F				
	690 V	20 A	20 - 8	-
D				
	600 V	5 A	20 - 8	-

Classifications

ECLASS

ECLASS-13.0	27250190
ECLASS-15.0	27250190

ETIM

ETIM 10.0	EC002848

UNSPSC

UNSPSC 21.0	39121400

Environmental product compliance

EU RoHS

Fulfills EU RoHS substance requirements	Yes, No exemptions

China RoHS

Environment friendly use period (EFUP)	EFUP-E
	No hazardous substances above the limits

EU REACH SVHC

REACH candidate substance (CAS No.)	No substance above 0.1 wt%

Phoenix Contact 2026 © - all rights reserved
https://www.phoenixcontact.com

Phoenix Contact USA
586 Fulling Mill Road
Middletown, PA 17057, United States
(+717) 944-1300
info@phoenixcon.com