KDT-ST 11 - Filler plug

3064001

https://www.phoenixcontact.com/us/products/3064001

Please be informed that the data shown in this PDF document is generated from our online catalog. Please find the complete data in the user documentation. Our general terms of use for downloads are valid.



Filler plug, material: PA, length: 20 mm, diameter: 11 mm

Commercial data

Item number	3064001
Packing unit	25 pc
Minimum order quantity	25 pc
Sales key	BF67
Product key	AF7CZX
GTIN	4046356301466
Weight per piece (including packing)	2.08 g
Weight per piece (excluding packing)	2.01 g
Customs tariff number	39174000
Country of origin	DE

Technical data

Notes

General	The filler plugs are used to seal unused cable sleeves.

Product properties

Product type	Sealing plugs

Dimensions

Dimensional drawing	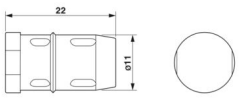
Length	20 mm
Diameter	11 mm

Material specifications

Color	black (RAL 9005)
Material	PA

Environmental and real-life conditions

Ambient conditions

Degree of protection	IP54 (Observe the assembly instructions)
Ambient temperature (operation)	-20 °C ... 80 °C

Mounting

Assembly note	IP54: for vertical sealing frame mounting/for horizontal sealing frame mounting (downward cable outlet direction).

Drawings

Dimensional drawing

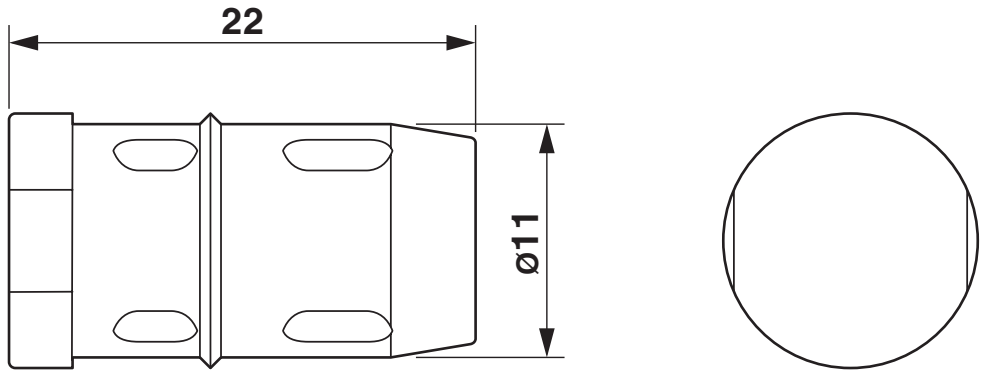

Dimensional drawing

Classifications

ECLASS

ECLASS-13.0	23111190
ECLASS-15.0	27144492

ETIM

ETIM 10.0	EC002610

UNSPSC

UNSPSC 21.0	39121300

Environmental product compliance

EU RoHS

Fulfills EU RoHS substance requirements	Yes, No exemptions

China RoHS

Environment friendly use period (EFUP)	EFUP-E
	No hazardous substances above the limits

EU REACH SVHC

REACH candidate substance (CAS No.)	No substance above 0.1 wt%

EF3.1 Climate Change

CO2e kg	0.027 kg CO2e

Phoenix Contact 2026 © - all rights reserved
https://www.phoenixcontact.com

Phoenix Contact USA
586 Fulling Mill Road
Middletown, PA 17057, United States
(+717) 944-1300
info@phoenixcon.com