UP 4/ 1-L - Plug

3060021

https://www.phoenixcontact.com/us/products/3060021

Please be informed that the data shown in this PDF document is generated from our online catalog. Please find the complete data in the user documentation. Our general terms of use for downloads are valid.



Plug, nom. voltage: 800 V, nominal current: 32 A, number of positions: 1, connection method: Screw connection, Rated cross section: 4 mm^2, cross section: 0.2 mm^2- 6 mm^2, color: gray

Product description

Connector element left, left housing without engagement pin, right opened without cover

Your advantages

- The COMBI plugs for self-assembly provide solutions that users can implement themselves
- The screw plugs can be combined with COMBI terminal blocks with all forms of connection technology and are available in two versions
- The plugs are assembled directly on site by snapping together 1-position plug elements
- The plug design enables space-saving potential distribution by using four-conductor terminal blocks with two slots

Commercial data

Item number	3060021
Packing unit	50 pc
Minimum order quantity	50 pc
Sales key	BE01
Product key	BE1144
GTIN	4046356088343
Weight per piece (including packing)	4.9 g
Weight per piece (excluding packing)	4.863 g
Customs tariff number	85366990
Country of origin	TR

Technical data

Notes

Notes on operation	COMBI connectors are connectors without switching power in accordance with IEC 61984 and can be connected or disconnected without load or voltage when used as intended

Product properties

Product type	Terminal plug
Number of positions	1
Pitch	6.2 mm
Potentials	1

Insulation characteristics

Overvoltage category	III
Degree of pollution	3

Electrical properties

Rated surge voltage	8 kV

Connection data

Nominal cross section	4 mm²
Connection method	Screw connection
Screw thread	M3
Tightening torque	0.6 ... 0.8 Nm
Stripping length	9 mm
Internal cylindrical gage	A4
Connection in acc. with standard	IEC 61984
Conductor cross-section rigid	0.2 mm² ... 6 mm²
Cross section AWG	24 ... 10 (converted acc. to IEC)
Conductor cross-section flexible	0.2 mm² ... 6 mm²
Conductor cross-section, flexible [AWG]	24 ... 10 (converted acc. to IEC)
Conductor cross-section flexible (ferrule without plastic sleeve)	0.25 mm² ... 4 mm²
Flexible conductor cross-section (ferrule with plastic sleeve)	0.25 mm² ... 4 mm²
2 conductors with same cross section, rigid	0.2 mm² ... 1.5 mm²
2 conductors with same cross section, flexible	0.2 mm² ... 1.5 mm²
2 conductors with same cross section, flexible, with ferrule without plastic sleeve	0.25 mm² ... 1.5 mm²
2 conductors with the same cross section, flexible, with TWIN ferrule with plastic sleeve	0.5 mm² ... 1.5 mm²
Nominal cross section	4 mm²
Nominal current	32 A
Maximum load current	32 A (with 6 mm² conductor cross-section)
Nominal voltage	800 V

Dimensions

Width	6.2 mm
Height	21 mm
Depth	41.2 mm
Length	21 mm
Pitch	6.2 mm

Material specifications

Color	gray (RAL 7042)
Flammability rating according to UL 94	V0
Insulating material group	I
Insulating material	PA
Static insulating material application in cold	-60 °C
Temperature index of insulation material (DIN EN 60216-1 (VDE 0304-21))	125 °C
Relative insulation material temperature index (Elec., UL 746 B)	130 °C
Fire protection for rail vehicles (DIN EN 45545-2) R22	HL 1 - HL 3
Fire protection for rail vehicles (DIN EN 45545-2) R23	HL 1 - HL 3
Fire protection for rail vehicles (DIN EN 45545-2) R24	HL 1 - HL 3
Fire protection for rail vehicles (DIN EN 45545-2) R26	HL 1 - HL 3
Calorimetric heat release NFPA 130 (ASTM E 1354)	27,5 MJ/kg
Surface flammability NFPA 130 (ASTM E 162)	passed
Specific optical density of smoke NFPA 130 (ASTM E 662)	passed
Smoke gas toxicity NFPA 130 (SMP 800C)	passed

Environmental and real-life conditions

Ambient conditions

Ambient temperature (operation)	-60 °C (max. operating temperature see derating curve)
Ambient temperature (storage/transport)	-25 °C ... 60 °C (for a short time, not exceeding 24 h, -60 °C to +70 °C)
Ambient temperature (assembly)	-5 °C ... 70 °C
Ambient temperature (actuation)	-5 °C ... 70 °C
Permissible humidity (operation)	20 % ... 90 %
Permissible humidity (storage/transport)	30 % ... 70 %

Standards and regulations

Connection in acc. with standard	IEC 61984

Drawings

Schematic diagram

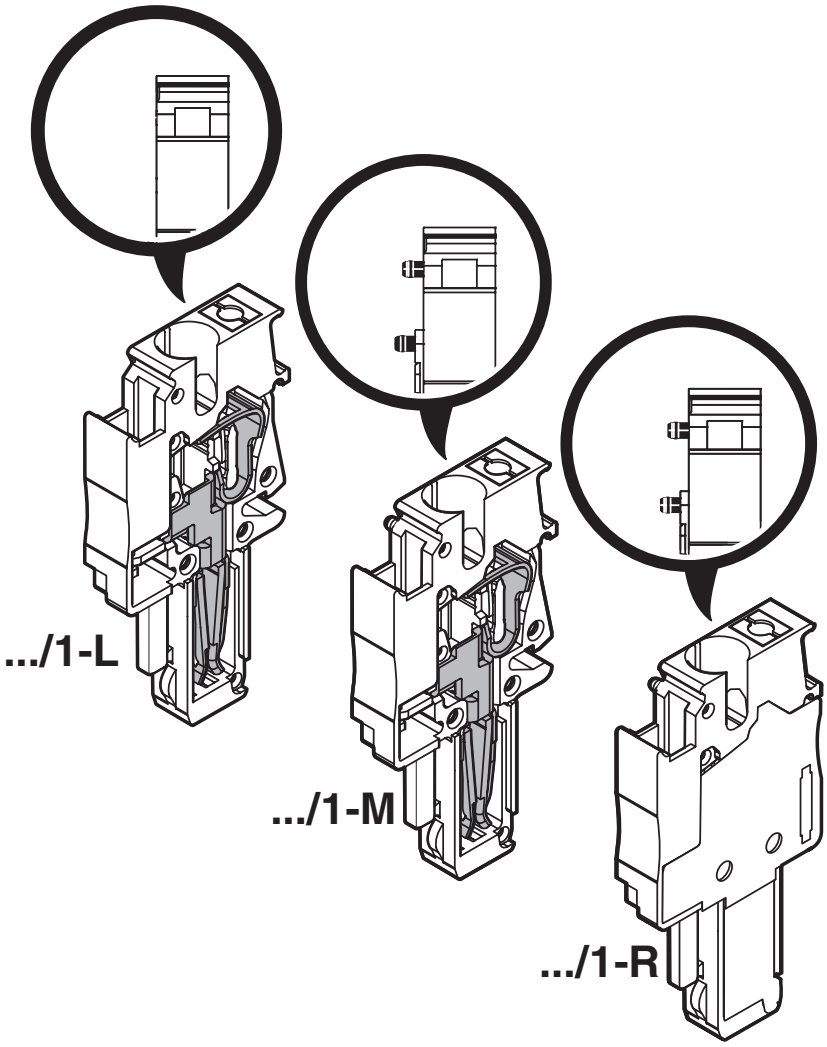

Diagram

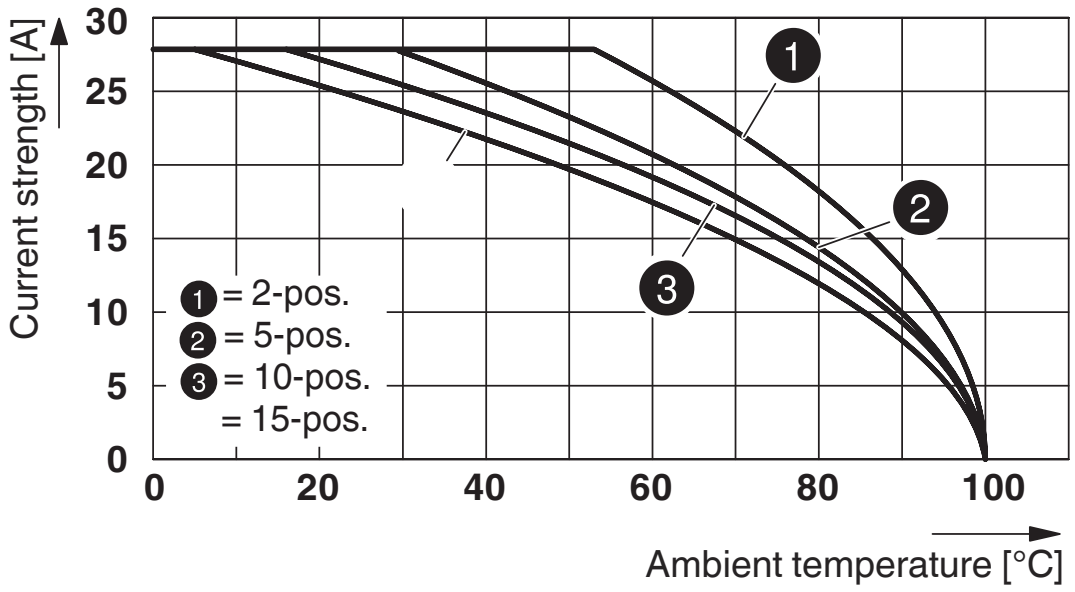

Circuit diagram



Approvals

To download certificates, visit the product detail page: https://www.phoenixcontact.com/us/products/3060021

CSA
Approval ID: 13631

	Nominal voltage U_N	Nominal current I_N	Cross section AWG	Cross section mm^2
B				
	600 V	30 A	26 - 10	-
C				
	600 V	30 A	26 - 10	-

IECEE CB Scheme
Approval ID: NL-34722_A1

	Nominal voltage U_N	Nominal current I_N	Cross section AWG	Cross section mm^2
keine				
	800 V	32 A	-	-

cULus Recognized
Approval ID: E60425

	Nominal voltage U_N	Nominal current I_N	Cross section AWG	Cross section mm^2
B				
	600 V	30 A	26 - 10	-
Multi-conductor connection	600 V	30 A	26 - 14	-
C				
	600 V	30 A	26 - 10	-
Multi-conductor connection	600 V	30 A	26 - 14	-

KEMA-KEUR
Approval ID: 71-114072 REV.1

	Nominal voltage U_N	Nominal current I_N	Cross section AWG	Cross section mm^2
keine				
	800 V	32 A	-	-

EAC
Approval ID: KZ7500651131219505

Classifications

ECLASS

ECLASS-13.0	27250306
ECLASS-15.0	27250306

ETIM

ETIM 10.0	EC002021

UNSPSC

UNSPSC 21.0	39121400

Environmental product compliance

EU RoHS

Fulfills EU RoHS substance requirements	Yes, No exemptions

China RoHS

Environment friendly use period (EFUP)	EFUP-E
	No hazardous substances above the limits

EU REACH SVHC

REACH candidate substance (CAS No.)	No substance above 0.1 wt%

EF3.1 Climate Change

CO2e kg	0.03 kg CO2e

Phoenix Contact 2026 © - all rights reserved
https://www.phoenixcontact.com

Phoenix Contact USA
586 Fulling Mill Road
Middletown, PA 17057, United States
(+717) 944-1300
info@phoenixcon.com