DP PS-8 - Spacer plate

3036741

https://www.phoenixcontact.com/us/products/3036741

Please be informed that the data shown in this PDF document is generated from our online catalog. Please find the complete data in the user documentation. Our general terms of use for downloads are valid.



Spacer plate, depth: 29 mm, width: 8.2 mm, height: 22.4 mm, number of positions: 1, color: red

Commercial data

Item number	3036741
Packing unit	10 pc
Minimum order quantity	10 pc
Sales key	BE29
Product key	BE2Z3X
GTIN	4017918818999
Weight per piece (including packing)	2.06 g
Weight per piece (excluding packing)	1.9 g
Customs tariff number	39269097
Country of origin	PL

Technical data

Product properties

Product type	Divider plate
Number of positions	1

Material specifications

Color	red (RAL 3001)
Material	PA
Flammability rating according to UL 94	V0
Static insulating material application in cold	-60 °C
Relative insulation material temperature index (Elec., UL 746 B)	125 °C

Dimensions

Dimensional drawing	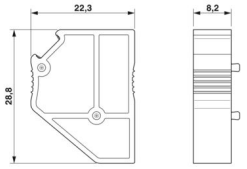
Width	8.2 mm
Height	22.4 mm
Depth	29 mm

Environmental and real-life conditions

Ambient conditions

Ambient temperature (operation)	-60 °C ... 110 °C (Operating temperature range incl. self-heating; for max. short-term operating temperature, see RTI Elec.)
Ambient temperature (storage/transport)	-25 °C ... 60 °C (for a short time, not exceeding 24 h, -60 °C to +70 °C)
Ambient temperature (assembly)	-5 °C ... 70 °C
Ambient temperature (actuation)	-5 °C ... 70 °C ( )
Permissible humidity (operation)	20 % ... 90 %
Permissible humidity (storage/transport)	30 % ... 70 %

Drawings

Dimensional drawing

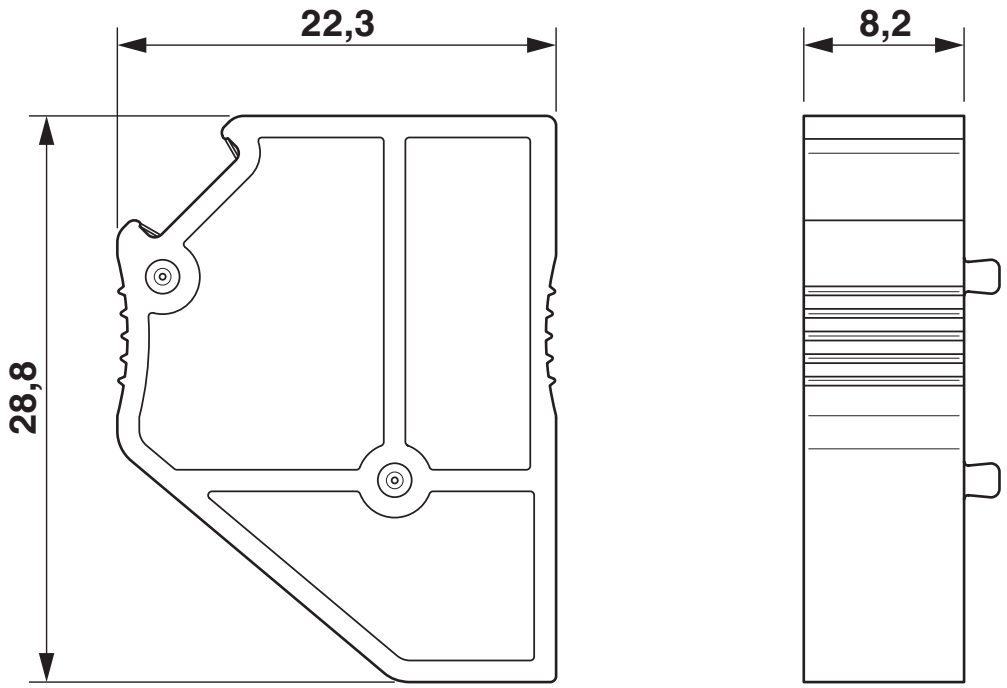

Classifications

ECLASS

ECLASS-13.0	27250301
ECLASS-15.0	27250301

ETIM

ETIM 10.0	EC000886

UNSPSC

UNSPSC 21.0	39121400

Environmental product compliance

EU RoHS

Fulfills EU RoHS substance requirements	Yes, No exemptions

China RoHS

Environment friendly use period (EFUP)	EFUP-E
	No hazardous substances above the limits

EU REACH SVHC

REACH candidate substance (CAS No.)	No substance above 0.1 wt%

EF3.1 Climate Change

CO2e kg	0.037 kg CO2e

Phoenix Contact 2026 © - all rights reserved
https://www.phoenixcontact.com

Phoenix Contact USA
586 Fulling Mill Road
Middletown, PA 17057, United States
(+717) 944-1300
info@phoenixcon.com