PSR-SPP- 24DC/FSP/2X1/1X2 - Coupling relay

2986957

https://www.phoenixcontact.com/us/products/2986957

Please be informed that the data shown in this PDF document is generated from our online catalog. Please find the complete data in the user documentation. Our general terms of use for downloads are valid.



The figure shows a version with a screw connection

Safe coupling relay for SIL 3 high and low demand applications, coupled digital output signals to the I/O, 2 enabling current paths, 1 signal contact, module for safe state off applications, integrated test pulse filter, width: 17.5 mm, pluggable Push-in terminal block

Your advantages

- Narrow 17.5 mm housing
- Up to SIL 3 in accordance with IEC 61508
- Easy proof test according to IEC 61508 thanks to integrated signal contact
- Long service life thanks to filtering of controller test pulses
- Force-guided contacts in accordance with EN 50205
- 2 enabling current paths
- Couples digital output signals from failsafe controllers to I/O devices (valves, etc.) for electrical isolation and power adaptation

ELEKTROGERÄTE RÜCKNAHME

Commercial data

Item number	2986957
Packing unit	1 pc
Minimum order quantity	1 pc
Sales key	DN01
Product key	DNA161
GTIN	4046356520928
Weight per piece (including packing)	156 g
Weight per piece (excluding packing)	128.26 g
Customs tariff number	85364900

Country of origin	DE

Technical data

Product properties

Product type	Coupling relay
Product family	PSRclassic
Application	Safe switch off
	High demand
	Low demand
Control	1-channel
Mechanical service life	10x 10^6 cycles
Relay type	Electromechanical relay with force-guided contacts in accordance with IEC/EN 61810-3

Insulation characteristics

Overvoltage category	III
Degree of pollution	2

Times

Typ. starting time with U_s	50 ms (with U_s when controlled via A1)
Typical release time	50 ms (with U_s when controlled via A1)
Recovery time	1 s

Electrical properties

Maximum power dissipation for nominal condition	2.4 W
Nominal operating mode	100% operating factor
Rated insulation voltage	250 V
Rated surge voltage/insulation	Safe isolation, reinforced insulation 6 kV between the control circuits (A1/A2), (31/32), (13/14, 23/24)

Supply

Designation	A1/A2
Rated control circuit supply voltage U_S	24 V DC -15 % / +10 %
Rated control supply current I_S	typ. 55 mA (typ. with U_S)
Power consumption at U_S	typ. 1.32 W
Inrush current	max. 100 mA (typ. with U_S)
Filter time	max. 5 ms (in the event of voltage dips at U_s)
	max. 1 ms (Test pulse width; high test pulse at A1/A2)
	≥ 100 ms (Test pulse rate, high test pulse)
	Test pulse rate = 100 x test pulse width
	max. 5 ms (Test pulse width; low test pulse at A1/A2)
	≥ 50 ms (Test pulse rate; low test pulse at A1/A2)
	Test pulse rate = 15 x Test pulse width
Protective circuit	Surge protection
	Suppressor diode, 33 V (A1 - A2)

Output data

Relay: Enabling current paths (13/14, 23/24)

Output description	2 x N/O, undelayed
Number of outputs	2
Contact switching type	2 enabling current paths
Contact material	AgCuNi, + 0.2 µm Au
Switching voltage	min. 15 V AC/DC
	max. 250 V AC/DC
Switching power	min. 75 mW
Inrush current	max. 5 A
Switching capacity	5 A (24 V (DC13))
	5 A (230 V (AC15))
Limiting continuous current	5 A
Sq. Total current	50 A^2 (observe derating)
Switching frequency	max. 0.5 Hz
Mechanical service life	10^7 cycles
Output fuse	10 A gL/gG (High demand)
	4 A gL/gG (Low demand)

Relay: 31/32

Output description	1 N/C signal contact
Number of outputs	1
Contact switching type	1 confirmation current path
Contact material	AgCuNi, + 0.2 µm Au
Switching power	min. 75 mW
Inrush current	max. 100 mA
Limiting continuous current	100 mA
Mechanical service life	10^7 cycles
Output fuse	150 mA (fast-blow)

Connection data

Connection technology

pluggable	yes

Conductor connection

Connection method	Push-in connection
Conductor cross-section rigid	0.2 mm² ... 1.5 mm²
Conductor cross-section flexible	0.2 mm² ... 1.5 mm²
Conductor cross-section, flexible, with ferrule, with plastic sleeve	0.25 mm² ... 1.5 mm² (only together with CRIMPFOX 6)
Conductor cross-section, flexible, with ferrule, without plastic sleeve	0.25 mm² ... 1.5 mm² (only together with CRIMPFOX 6)
Conductor cross-section AWG	24 ... 16
Stripping length	8 mm

Signaling

Operating voltage display	1 x yellow LED

Dimensions

Width	17.5 mm
Height	112 mm
Depth	114.5 mm

Material specifications

Color (Housing)	yellow (RAL 1018)
Housing material	PA

Characteristics

Safety data

Stop category (EN 60204-1)	0

Safety data: EN ISO 13849

Performance level (PL)	e (Diagnostic coverage (DC) of the control unit at A1/A2 must be ≥ 99%)

Safety data: EN 50156

Safety Integrity Level (SIL)	3

Safety data: IEC 61508 - High demand

Safety Integrity Level (SIL)	3 (max. 10% of the entire SIL; diagnostic coverage (DC) of the control unit at A1/A2 must be ≥ 90%)

Safety data: IEC 61508 - Low demand

Safety Integrity Level (SIL)	3 (max. 10% of the entire SIL; diagnostic coverage (DC) of the control unit at A1/A2 must be ≥ 90%)

Safety data: EN IEC 62061

Safety Integrity Level (SIL)	3 (max. 10% of the entire SIL; diagnostic coverage (DC) of the control unit at A1/A2 must be ≥ 90%)

Environmental and real-life conditions

Ambient conditions

Degree of protection	IP20
Min. degree of protection of inst. location	IP54
Ambient temperature (operation)	-20 °C ... 55 °C (observe derating)
Ambient temperature (storage/transport)	-40 °C ... 70 °C
Maximum altitude	≤ 2000 m (Above sea level)
Max. permissible humidity (storage/transport)	75 % (on average, 85% infrequently, non-condensing)
Max. permissible relative humidity (operation)	75 % (on average, 85% infrequently, non-condensing)
Shock	15g
Vibration (operation)	10 Hz ... 150 Hz, 2g

Approvals

CE

Identification	CE-compliant

Mounting

Mounting type	DIN rail mounting
Mounting position	any

Drawings

Application drawing

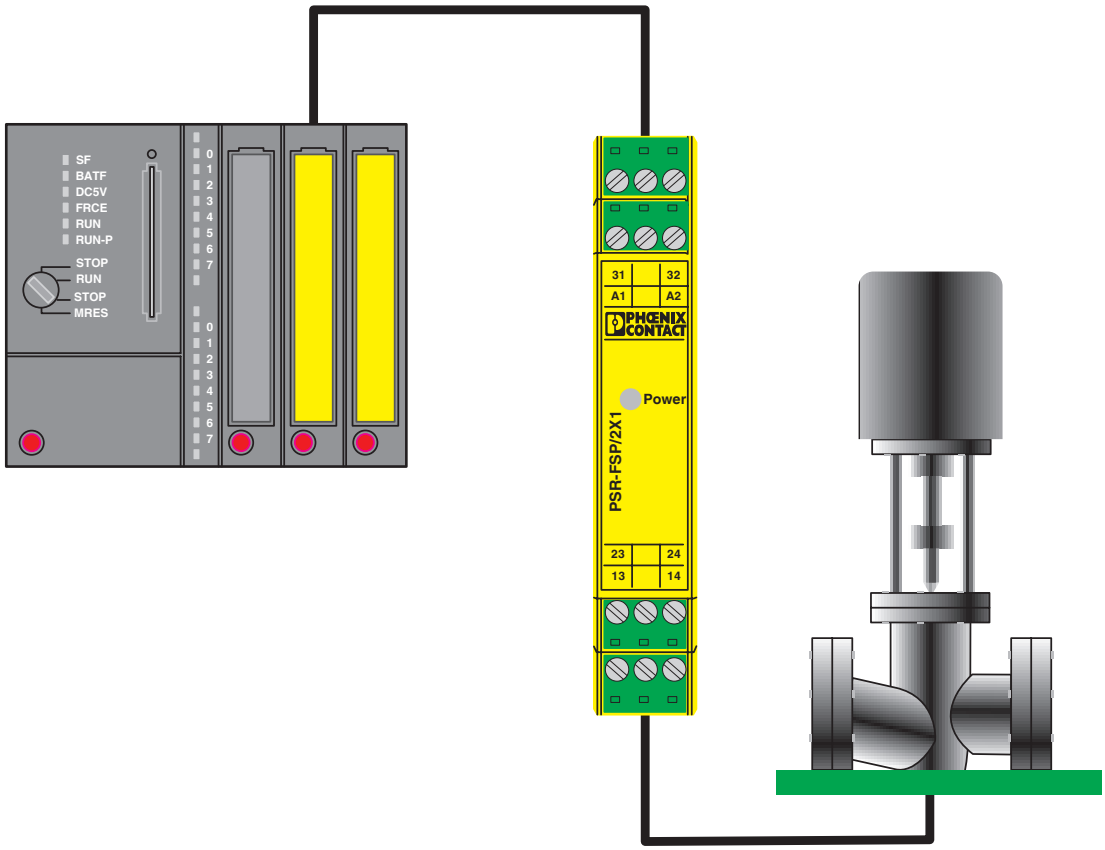

Example of electrical isolation of a safety PLC output from the field.

Circuit diagram

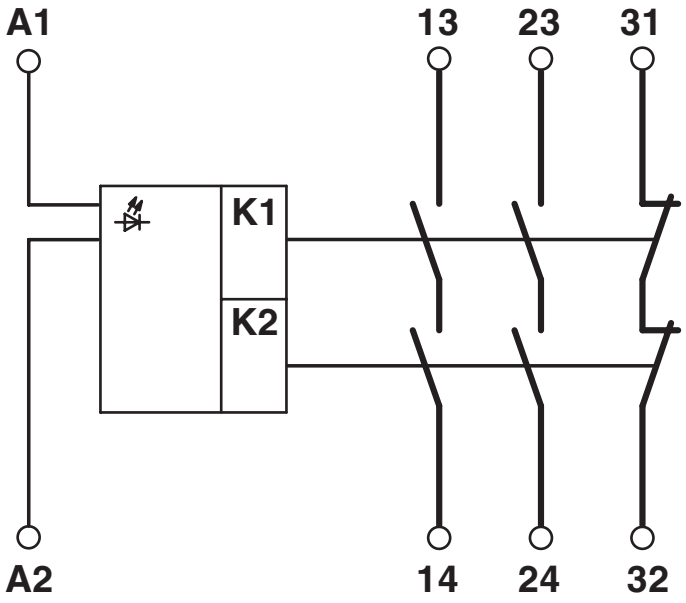

Block diagram

Circuit diagram

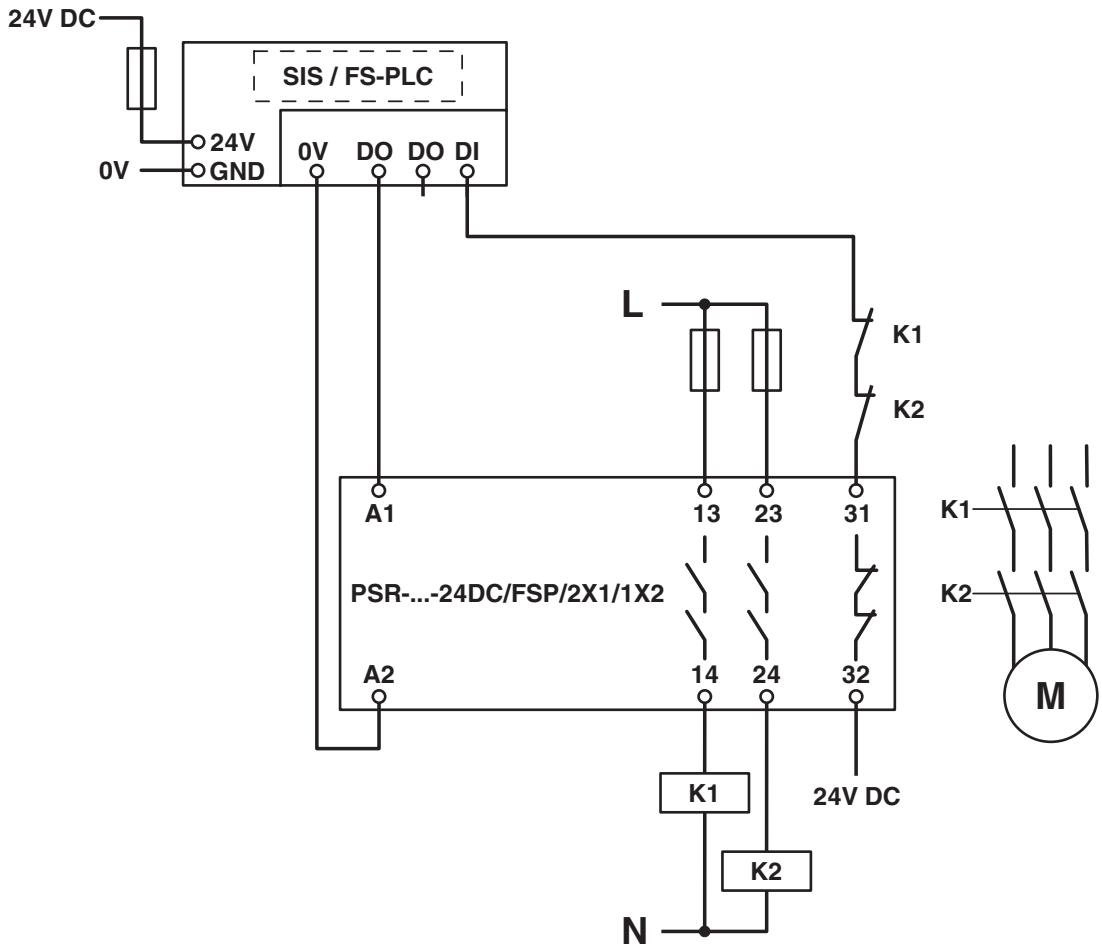

Single-channel connection with integration of the confirmation current path

Circuit diagram

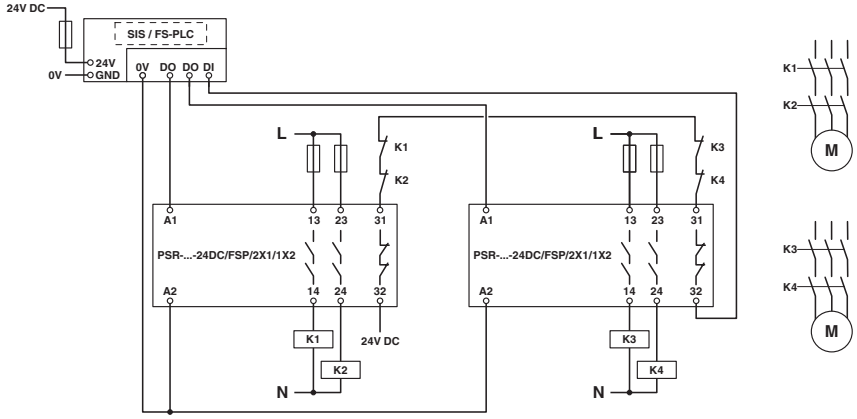

Two-channel connection with integration of the confirmation current path

Approvals

To download certificates, visit the product detail page: https://www.phoenixcontact.com/us/products/2986957

DNV GL
Approval ID: TAA00002UC

cULus Listed
Approval ID: E140324

Functional Safety
Approval ID: 968/EZ 365.12/24

Classifications

ECLASS

ECLASS-13.0	27371819
ECLASS-15.0	27371819
ECLASS-15.0 ASSET	27250101

ETIM

ETIM 10.0	EC001449

UNSPSC

UNSPSC 21.0	39122200

Environmental product compliance

EU RoHS

Fulfills EU RoHS substance requirements	Yes
Exemption	7(a), 7(c)-I

China RoHS

Environment friendly use period (EFUP)	EFUP-50
	An article-related China RoHS declaration table can be found in the download area for the respective article under "Manufacturer declaration". For all articles with EFUP-E, no China RoHS declaration table issued and required.

EU REACH SVHC

REACH candidate substance (CAS No.)	Lead(CAS: 7439-92-1)
SCIP	78ce5460-44b8-49ea-84b4-f7904567882e

Phoenix Contact 2026 © - all rights reserved
https://www.phoenixcontact.com

Phoenix Contact USA
586 Fulling Mill Road
Middletown, PA 17057, United States
(+717) 944-1300
info@phoenixcon.com