UMK-32 RM/MR-G24/1/PLC - Active module

2979472

https://www.phoenixcontact.com/us/products/2979472

Please be informed that the data shown in this PDF document is generated from our online catalog. Please find the complete data in the user documentation. Our general terms of use for downloads are valid.

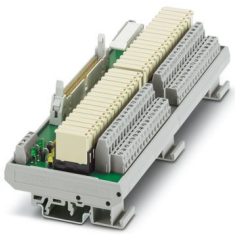

VARIOFACE output module, with 32 miniature relays, 1 N/O contact each, plugged, for 24 V DC (incl. relay)

Your advantages

- Narrow design width of just 55 mm (8 channels) or 202 mm (32 channels)
- Universal applications from 1 mA to 3 A continuous current thanks to 2-layer double contact with hard gold plating
- LED status indicator per signal path and supply voltage
- Freewheeling and polarity protection diode for each signal path
- Plug-in miniature relays each with an N/O contact

Commercial data

Item number	2979472
Packing unit	1 pc
Minimum order quantity	1 pc
Sales key	C421
Product key	DK2191
GTIN	4017918130367
Weight per piece (including packing)	454 g
Weight per piece (excluding packing)	403.83 g
Customs tariff number	85364190
Country of origin	DE

Technical data

Product properties

Product type	Interface module
No. of channels	32
Operating mode	100% operating factor
Mechanical service life	2x 10^7 cycles

Insulation characteristics

Overvoltage category	III
Pollution degree	2

Electrical properties

Rated insulation voltage	300 V AC
Rated surge voltage	4 kV (Basic insulation)

Supported controller: SIEMENS S7-1500

Suitable I/O card	6ES7521-1BL00-0AB0
	6ES7522-1BL00-0AB0
	6ES7522-1BL01-0AB0

Supported controller: SIEMENS S7-400

Suitable I/O card	6ES7422-1BL00-0AA0
	6ES7422-7BL00-0AB0

Supported controller: ALLEN-BRADLEY PLC 5

Suitable I/O card	1771 OBN

Supported controller: EMERSON DeltaV

Suitable I/O card	VE4002S1T2B6

Supported controller: GE-FANUC RX3i

Suitable I/O card	IC694MDL754

Supported controller: HONEYWELL Experion PKS C200

Suitable I/O card	TC-ODD 321

Supported controller: MITSUBISHI MELSEC L

Suitable I/O card	LY41PT1P
	LY42PT1P

Supported controller: MITSUBISHI MELSEC Q

Suitable I/O card	QY81P
	QY82P

Supported controller: SCHNEIDER ELECTRIC Modicon TSX QUANTUM

Suitable I/O card	DDO 353

Supported controller: SIEMENS S7-300 / ET 200 M

Suitable I/O card	6ES7322-1BL00-0AA0

Supported controller: SIEMENS ET 200SP HA

Suitable terminal block	6DL1193-6TP00-0BH1
	6DL1193-6TP00-0DH1
	6DL1193-6TP00-0BM1
	6DL1193-6TP00-0DM1
Suitable I/O module	6DL1131-6BL00-0PH1 (Terminal Block H1/M1)
	6DL1132-6BL00-0PH1 (Terminal Block H1/M1)

Input data

Nominal input voltage U_N	24 V DC
Input voltage range in reference to U_N	0.8 ... 1.1
Input voltage range	19.2 V DC ... 26.4 V DC
Typical input current at U_N	6.5 mA
Typical response time	5 ms
Typical release time	15 ms
Protective circuit	Freewheeling diode; Freewheeling diode
	Reverse polarity protection; Polarity protection diode
Operating voltage display	Green LED
Status display/channel	Yellow LED

Output data

Switching

Contact switching type	1 N/O contact
Type of switch contact	Double contact
Contact material	AgNi, 5 µm hard gold-plated
Maximum switching voltage	250 V AC
	125 V DC
Minimum switching voltage	5 V
Limiting continuous current	3 A
Maximum inrush current	5 A
Min. switching current	1 mA
Interrupting rating (ohmic load) max.	72 W (24 V DC)
	60 W (48 V DC)
	50 W (60 V DC)
	50 W (110 V DC)
	750 VA (250 V AC)
Error detection (line break / short-circuit)	no

Connection data

Controller level

Connection method	IDC/FLK pin strip
Number of connections	1
Number of positions	50
Pitch	2.54 mm

Field level

Connection method	Screw connection
Stripping length	6 mm
Screw thread	M3
Number of connections	64
Conductor cross-section rigid	0.14 mm² ... 1.5 mm²
Conductor cross-section flexible	0.14 mm² ... 1.5 mm²
Conductor cross-section AWG	26 ... 16

Supply

Connection method	Screw connection
Stripping length	6 mm
Screw thread	M3
Number of connections	4
Number of positions	2
Conductor cross-section rigid	0.14 mm² ... 1.5 mm²
Conductor cross-section flexible	0.14 mm² ... 1.5 mm²
Conductor cross-section AWG	26 ... 14

Signaling

Status display present	yes

Dimensions

Width	202.5 mm
Height	77 mm
Depth	52.5 mm

Material specifications

Color	gray (RAL 7042)

Environmental and real-life conditions

Ambient conditions

Degree of protection	IP00
Ambient temperature (operation)	-20 °C ... 50 °C
Ambient temperature (storage/transport)	-20 °C ... 70 °C

Standards and regulations

Standards/regulations	EN 61010-2-201
	IEC 60664

Mounting

Mounting type	DIN rail mounting
Assembly note	in rows with zero spacing
Mounting position	any

Notes

Notes on operation	Observe the maximum switching power of the relays used
Notes on operation	Do not connect adjacent channels to SELV/ PELV and voltages dangerous to the touch.
Notes on operation	The outputs are not suitable for switching different line conductors. The sum of the switching voltages used for adjacent outputs must not exceed the rated insulation voltage value
Notes on operation	The necessary requirements for insulation (basic insulation or reinforced insulation) from adjacent modules (in DIN-rail direction) must be realized by applying suitable measures (e. g., divider plates).
Notes on operation	For proper use, the specifications of the installation directive (see Downloads) must be observed. For applications or use with third-party products, the specifications, and the safety and warning instructions of the respective third-party manufacturer must also be met.

Drawings

Diagram

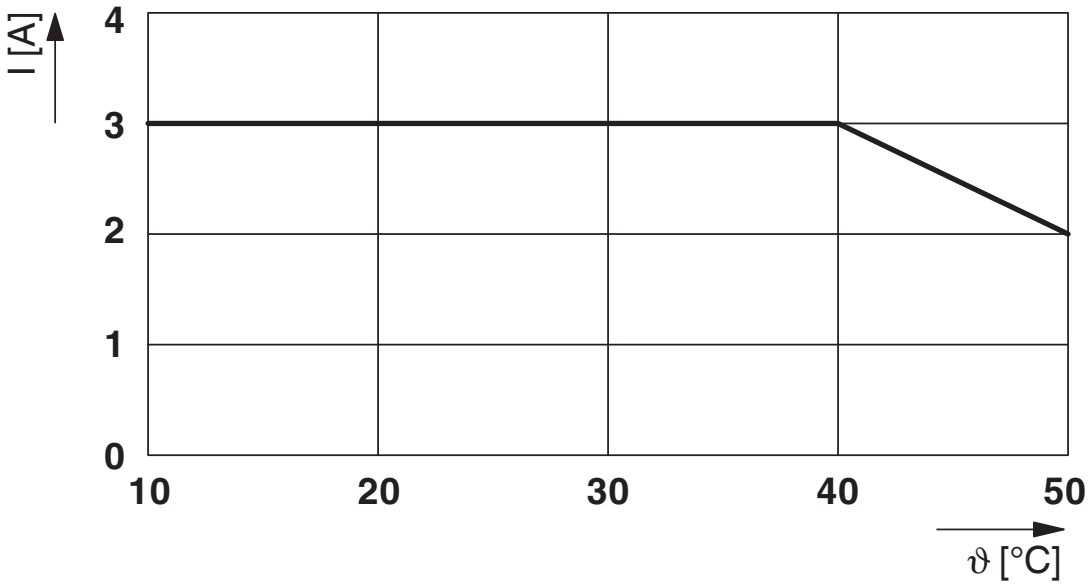

Derating curve for limiting continuous current

Circuit diagram

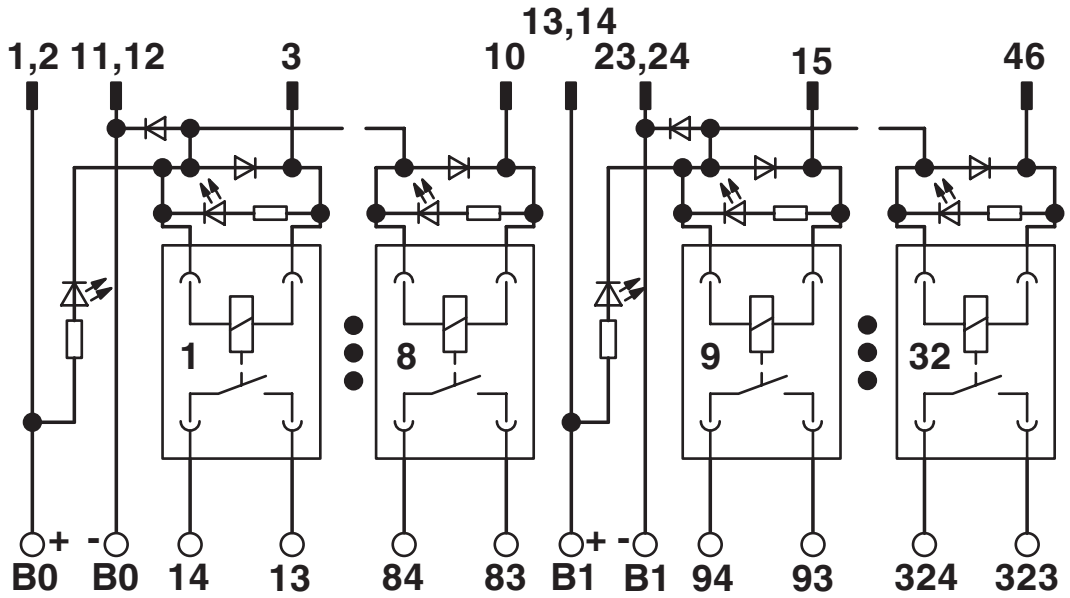

Circuit diagram

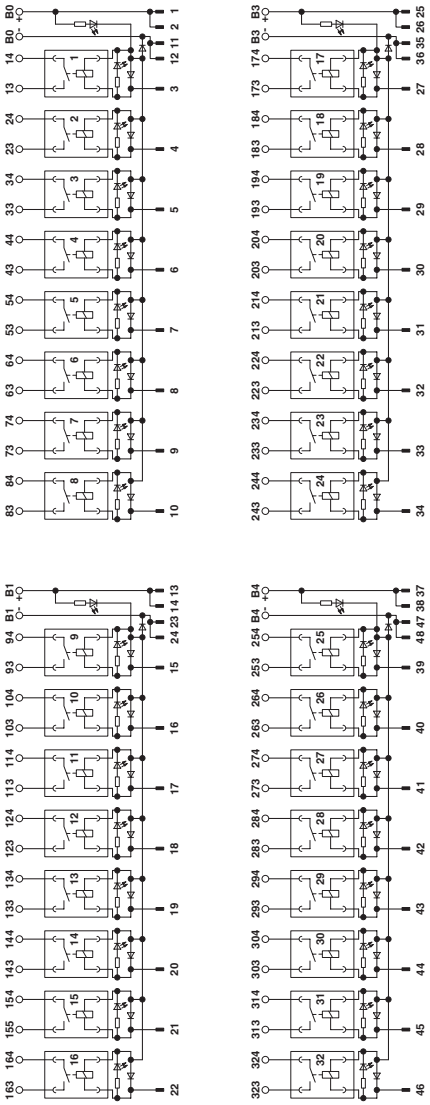

Approvals

To download certificates, visit the product detail page: https://www.phoenixcontact.com/us/products/2979472

cUL Recognized
Approval ID: E238705

	Nominal voltage U_N	Nominal current I_N	Cross section AWG	Cross section mm^2
keine				
	24 V	3 A	-	-

UL Recognized
Approval ID: E238705

	Nominal voltage U_N	Nominal current I_N	Cross section AWG	Cross section mm^2
keine				
	24 V	3 A	-	-

EAC
Approval ID: RU*DE*08.B.01841/19

Classifications

ECLASS

ECLASS-13.0	27141152
ECLASS-15.0	27141152

ETIM

ETIM 10.0	EC002780

UNSPSC

UNSPSC 21.0	39121400

Environmental product compliance

EU RoHS

Fulfills EU RoHS substance requirements	Yes
Exemption	7(a), 7(c)-I

China RoHS

Environment friendly use period (EFUP)	EFUP-50
	An article-related China RoHS declaration table can be found in the download area for the respective article under "Manufacturer declaration". For all articles with EFUP-E, no China RoHS declaration table issued and required.

EU REACH SVHC

REACH candidate substance (CAS No.)	Lead(CAS: 7439-92-1)
SCIP	1075b1cd-56c1-4dc4-a6c1-a3443c2e5644

Phoenix Contact 2026 © - all rights reserved
https://www.phoenixcontact.com

Phoenix Contact USA
586 Fulling Mill Road
Middletown, PA 17057, United States
(+717) 944-1300
info@phoenixcon.com