# PLC-RSC- 48DC/21HC - Relay module

2967646

https://www.phoenixcontact.com/us/products/2967646

Please be informed that the data shown in this PDF document is generated from our online catalog. Please find the complete data in the user documentation. Our general terms of use for downloads are valid.



PLC-INTERFACE, consisting of PLC-BSC.../21 HC basic terminal block with screw connection and plug-in miniature relay for high continuous current, for mounting on DIN rail NS 35/7,5, limiting continuous current up to 10 A, 1 changeover contact, input voltage 48 V DC

## Your advantages

- All common input voltages of 12 V DC ... 230 V AC
- Efficient connection to system cabling using V8 adapter
- Long electrical service life thanks to 16 A relay
- Safe isolation between coil and contact side
- Max. continuous current of 10 A
- Functional plug-in bridges

## Commercial data

| | |
|---|---|
| Item number | 2967646 |
| Packing unit | 10 pc |
| Minimum order quantity | 10 pc |
| Sales key | C461 |
| Product key | DK6236 |
| GTIN | 4017918171599 |
| Weight per piece (including packing) | 78.41 g |
| Weight per piece (excluding packing) | 72.95 g |
| Customs tariff number | 85364900 |
| Country of origin | DE |

# Technical data

## Product properties

| | |
|---|---|
| Product type | Relay Module |
| Product family | PLC-INTERFACE |
| Application | High continuous currents |
| Operating mode | 100% operating factor |
| Mechanical service life | 3x $10^7$ cycles |

### Insulation characteristics

| | |
|---|---|
| Insulation | Safe isolation, reinforced insulation |
| Overvoltage category | III |
| Pollution degree | 3 |

### Data management status

| | |
|---|---|
| Date of last data management | 06.11.2026 |

## Electrical properties

| | |
|---|---|
| Maximum power dissipation for nominal condition | 0.96 W |
| Test voltage (Winding/contact) | 4 kV AC (50 Hz, 1 min., winding/contact) |
| Rated surge voltage | 6 kV |

## Input data

### Coil side

| | |
|---|---|
| Nominal input voltage $U_N$ | 48 V DC |
| Input voltage range | 40.3 V DC ... 60 V DC (20 °C) |
| Nominal voltage (plugged-in electromechanical relay) | 24 V DC |
| Drive and function | monostable |
| Drive (polarity) | polarized |
| Typical input current at $U_N$ | 20 mA |
| Typical response time | 8 ms |
| Typical release time | 10 ms |
| Protective circuit | Reverse polarity protection; Polarity protection diode |
| | Freewheeling diode; Freewheeling diode |
| Operating voltage display | Yellow LED |

## Output data

### Switching

| | |
|---|---|
| Contact switching type | 1 changeover contact |
| Type of switch contact | Single contact |
| Contact material | AgNi |
| Maximum switching voltage | 250 V AC/DC (The divider plate PLC-ATP should be installed for voltages larger than 250 V (L1, L2, L3) between identical terminal blocks in adjacent modules. Potential bridging is then carried out |

| | |
|---|---|
| | with FBST 8-PLC... or ...FBST 500...) |
| Minimum switching voltage | 12 V (10 mA) |
| Limiting continuous current | 10 A |
| | 6 A (value applies to connections 12. If connections 12 are bridged, the normal value applies.) |
| Maximum inrush current | 30 A (300 ms) |
| Min. switching current | 10 mA (12 V) |
| Interrupting rating (ohmic load) max. | 240 W (at 24 V DC) |
| | 58 W (at 48 V DC) |
| | 48 W (at 60 V DC) |
| | 50 W (at 110 V DC) |
| | 80 W (at 220 V DC) |
| | 2500 VA (for 250 V AC) |
| Interrupting rating (ohmic load) max. bridged | 144 W (for 24 V DC. Value applies to connections 12. If connections 12 are bridged, the normal value applies.) |
| | 1500 VA (for 250 V AC. Value applies to connections 12. If connections 12 are bridged, the normal value applies.) |
| Switching capacity | 2 A (at 24 V, DC13) |
| | 0.2 A (at 110 V, DC13) |

## Connection data

| | |
|---|---|
| Connection method | Screw connection |
| Stripping length | 8 mm |
| Screw thread | M3 |
| Conductor cross-section rigid | 0.14 mm² ... 2.5 mm² |
| Conductor cross-section flexible | 0.14 mm² ... 2.5 mm² |
| | 0.2 mm² ... 2.5 mm² (Single ferrule) |
| | 2x 0.5 mm² ... 1.5 mm² (TWIN ferrule) |
| Conductor cross-section AWG | 26 ... 14 |
| Tightening torque | 0.6 Nm ... 0.8 Nm |

## Dimensions

Item dimensions

| | |
|---|---|
| Width | 14 mm |
| Height | 80 mm |
| Depth | 94 mm |

## Material specifications

| | |
|---|---|
| Color | gray (RAL 7042) |
| Flammability rating according to UL 94 (Housing) | V0 (Housing) |

## Environmental and real-life conditions

Ambient conditions

| | |
|---|---|
| Degree of protection (Relay) | RT II (Relay) |

| | |
|---|---|
| Degree of protection (Relay base) | IP20 (Relay base) |
| Ambient temperature (operation) | -40 °C ... 60 °C |
| Ambient temperature (storage/transport) | -40 °C ... 85 °C |

## Approvals

CE

| | |
|---|---|
| Certificate | CE-compliant |

UKCA

| | |
|---|---|
| Certificate | UKCA-compliant |

Shipbuilding approval

| | |
|---|---|
| Certificate | TAE0000196 |

Corrosive gas test

| | |
|---|---|
| Identification | ISA-S71.04. G3 Harsh Group |
| | EN 60068-2-60 |

Shipbuilding data

| | |
|---|---|
| Temperature | D |
| Humidity | A |
| Vibration | B/C |
| EMC | B |
| Enclosure | Required protection according to the Rules shall be provided upon installation on board |

## EMC data

| | |
|---|---|
| Electromagnetic compatibility | Conformance with EMC directive |
| Low Voltage Directive | Conformance with Low Voltage Directive |

## Standards and regulations

| | |
|---|---|
| Standards/regulations | IEC 60947-5-1 |

## Mounting

| | |
|---|---|
| Mounting type | DIN rail mounting |
| Assembly note | in rows with zero spacing |
| Mounting position | any |

## Drawings

Diagram

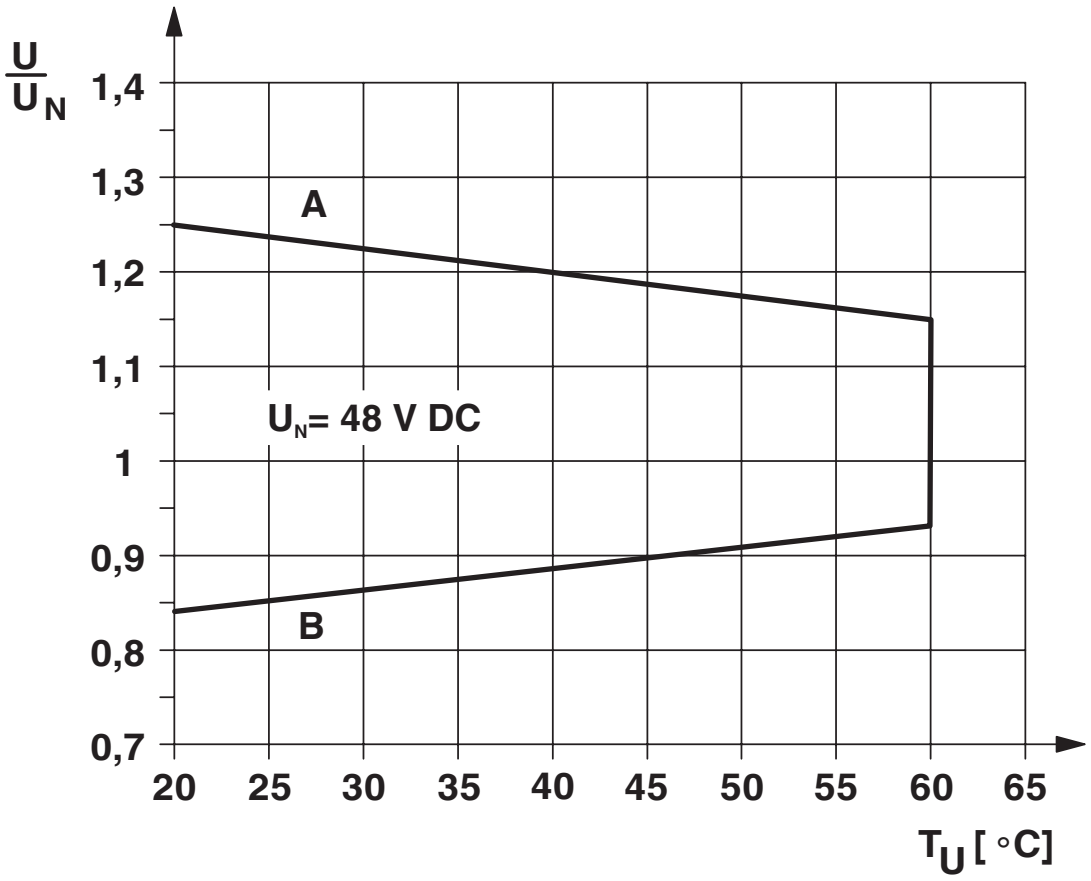


### Curve A

Maximum permissible continuous voltage $U_{max}$ with limiting continuous current on the contact side (see relevant technical data)

### Curve B

Minimum permissible operate voltage $U_{op}$ after pre-excitation (see relevant technical data)

Diagram

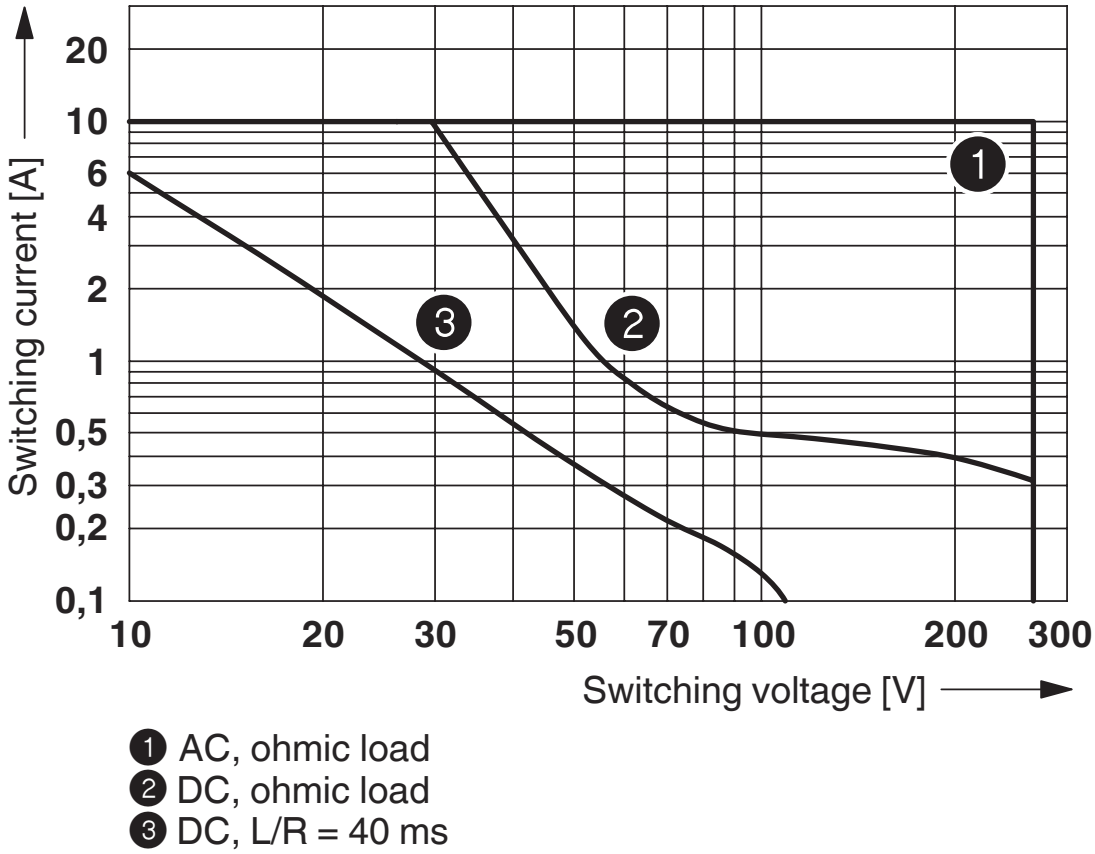


1 AC, ohmic load
2 DC, ohmic load
3 DC, L/R = 40 ms

Interrupting rating

Diagram

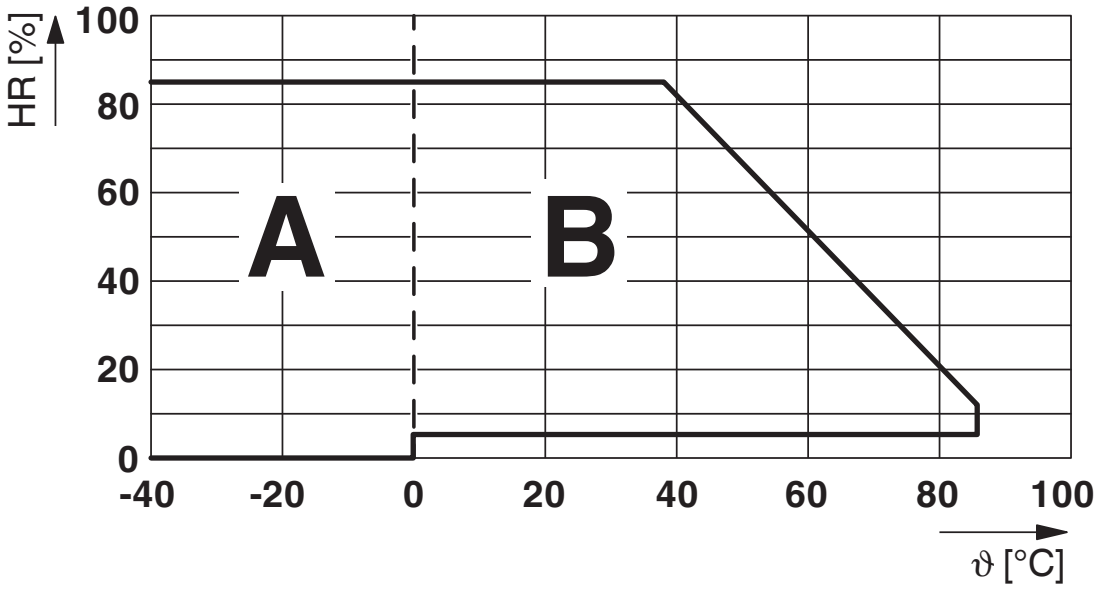


Permissible humidity for operation and storage.
The maximum permissible ambient temperature as specified in the data sheet must be observed.

Area A: Ice buildup at ambient temperatures ≤ 0°C must be prevented
Area B: Condensation at ambient temperatures > 0°C must be prevented

On 30 full days that are naturally distributed across an entire year, a humidity level of 95% is permissible at an ambient temperature ≤ 25°C.

Circuit diagram

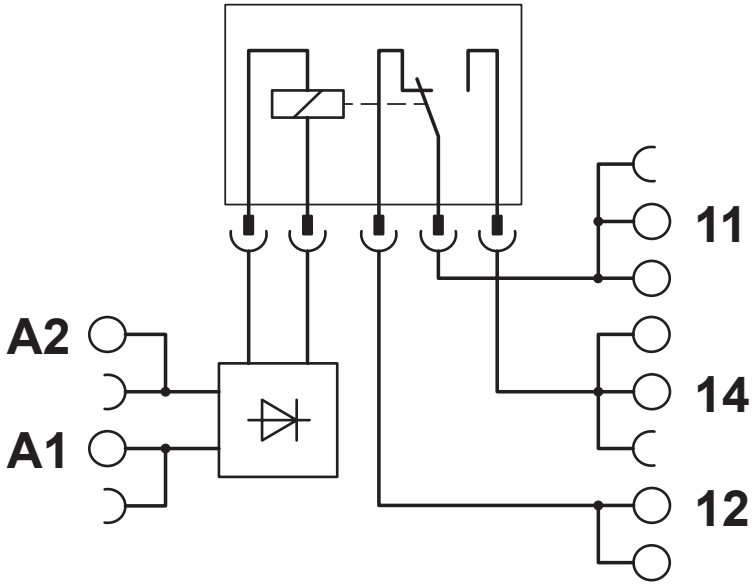

## Approvals

To download certificates, visit the product detail page: https://www.phoenixcontact.com/us/products/2967646

**cULus Listed**
Approval ID: E140324

**cULus Listed**
Approval ID: E140324

**cULus Listed**
Approval ID: E140324

**DNV**
Approval ID: TAE0000196

## Classifications

### ECLASS

| | |
|---|---|
| ECLASS-13.0 | 27371601 |
| ECLASS-15.0 | 27371601 |

### ETIM

| | |
|---|---|
| ETIM 10.0 | EC001437 |

### UNSPSC

| | |
|---|---|
| UNSPSC 21.0 | 39122300 |

## Environmental product compliance

EU RoHS

| | |
|---|---|
| Fulfills EU RoHS substance requirements | Yes |
| Exemption | 7(a), 7(c)-I |

China RoHS

| | |
|---|---|
| Environment friendly use period (EFUP) | EFUP-50 |
| | An article-related China RoHS declaration table can be found in the download area for the respective article under "Manufacturer declaration". For all articles with EFUP-E, no China RoHS declaration table issued and required. |

EU REACH SVHC

| | |
|---|---|
| REACH candidate substance (CAS No.) | Hexahydromethylphthalic anhydride(CAS: n/a) |
| | Lead(CAS: 7439-92-1) |
| SCIP | 7bf2752b-350f-4c45-b887-3ab340b311ca |

EF3.1 Climate Change

| | |
|---|---|
| CO2e kg | 0.846 kg CO2e |


Phoenix Contact 2026 © - all rights reserved
https://www.phoenixcontact.com



Phoenix Contact USA
586 Fulling Mill Road
Middletown, PA 17057, United States
(+717) 944-1300
info@phoenixcon.com