# PLC-OSC- 48DC/ 48DC/100 - Solid-state relay module

2966993

https://www.phoenixcontact.com/us/products/2966993

Please be informed that the data shown in this PDF document is generated from our online catalog. Please find the complete data in the user documentation. Our general terms of use for downloads are valid.



PLC-INTERFACE, consisting of PLC-BSC.../21 basic terminal block with screw connection and plug-in miniature solid-state relay, for mounting on DIN rail NS 35/7,5, 1 N/O contact, input: 48 V DC, output: 3 - 48 V DC/100 mA

## Your advantages

- Slim design
- Efficient connection to system cabling using V8 adapter
- RT III sealed solid-state relay
- Functional plug-in bridges
- Integrated input circuit
- High switching power
- Zero voltage switch at AC output

## Commercial data

| | |
|---|---|
| Item number | 2966993 |
| Packing unit | 10 pc |
| Minimum order quantity | 1 pc |
| Sales key | C461 |
| Product key | DK6223 |
| GTIN | 4017918165765 |
| Weight per piece (including packing) | 38.05 g |
| Weight per piece (excluding packing) | 35.212 g |
| Customs tariff number | 85364190 |
| Country of origin | DE |

# Technical data

## Product properties

| | |
|---|---|
| Product type | Solid-state relay module |
| Product family | PLC-INTERFACE |
| Application | Universal |
| Operating mode | 100% operating factor |

Insulation characteristics: Standards/regulations

| | |
|---|---|
| Insulation | Basic insulation |
| Overvoltage category | III |
| Pollution degree | 2 |

Data management status

| | |
|---|---|
| Date of last data management | 06.11.2026 |

## Electrical properties

| | |
|---|---|
| Maximum power dissipation for nominal condition | 0.43 W |
| Test voltage (Input/output) | 2.5 kV (50 Hz, 1 min., input/output) |

## Input data

| | |
|---|---|
| Nominal input voltage $U_N$ | 48 V DC |
| Nominal voltage (plugged-in solid-state relay) | 24 V DC |
| Input voltage range in reference to $U_N$ | 0.8 ... 1.2 |
| Input voltage range | 38.4 V DC ... 57.6 V DC |
| Switching threshold "0" signal in reference to $U_N$ | ≤ 0.3 |
| Switching threshold "1" signal in reference to $U_N$ | ≥ 0.8 |
| Typical input current at $U_N$ | 9 mA |
| Typical response time | 30 µs (at $U_N$) |
| Typical turn-off time | 300 µs (at $U_N$) |
| Operating voltage display | Yellow LED |
| Protective circuit | Reverse polarity protection; Polarity protection diode |
| | Freewheeling diode; Freewheeling diode |
| Transmission frequency | 300 Hz |

## Output data

| | |
|---|---|
| Contact switching type | 1 N/O contact |
| Design of digital output | electronic |
| Output voltage range | 3 V DC ... 48 V DC |
| Limiting continuous current | 100 mA |
| Voltage drop at max. limiting continuous current | ≤ 1 V |
| Output circuit | 2-conductor, floating |
| Protective circuit | Reverse polarity protection; Polarity protection diode |
| | Surge protection |

## Connection data

| | |
|---|---|
| Connection method | Screw connection |
| Stripping length | 8 mm |
| Screw thread | M3 |
| Conductor cross-section rigid | 0.14 mm² ... 2.5 mm² |
| Conductor cross-section flexible | 0.14 mm² ... 2.5 mm² |
| | 0.2 mm² ... 2.5 mm² (Single ferrule) |
| | 2x 0.5 mm² ... 1.5 mm² (TWIN ferrule) |
| Conductor cross-section AWG | 26 ... 14 |
| Tightening torque | 0.6 Nm ... 0.8 Nm |

## Dimensions

Item dimensions

| | |
|---|---|
| Width | 6.2 mm |
| Height | 80 mm |
| Depth | 94 mm |

## Material specifications

| | |
|---|---|
| Color | gray (RAL 7042) |
| Flammability rating according to UL 94 (Housing) | V0 (Housing) |

## Environmental and real-life conditions

Ambient conditions

| | |
|---|---|
| Ambient temperature (operation) | -25 °C ... 60 °C |
| Ambient temperature (storage/transport) | -25 °C ... 70 °C |

## Approvals

CE

| | |
|---|---|
| Certificate | CE-compliant |

UKCA

| | |
|---|---|
| Certificate | UKCA-compliant |

Shipbuilding approval

| | |
|---|---|
| Certificate | TAE0000196 |

Corrosive gas test

| | |
|---|---|
| Identification | ISA-S71.04. G3 Harsh Group |
| | EN 60068-2-60 |

Shipbuilding data

| | |
|---|---|
| Temperature | D |
| Humidity | A |
| Vibration | B/C |

| | |
|---|---|
| EMC | B |
| Enclosure | Required protection according to the Rules shall be provided upon installation on board |

## EMC data

| | |
|---|---|
| Electromagnetic compatibility | Conformance with EMC directive |
| Low Voltage Directive | Conformance with Low Voltage Directive |

## Standards and regulations

Standards/regulations

| | |
|---|---|
| Standards/regulations | IEC 60947-5-1 |

## Mounting

| | |
|---|---|
| Mounting type | DIN rail mounting |
| Assembly note | in rows with zero spacing |
| Mounting position | any |

## Drawings

Circuit diagram

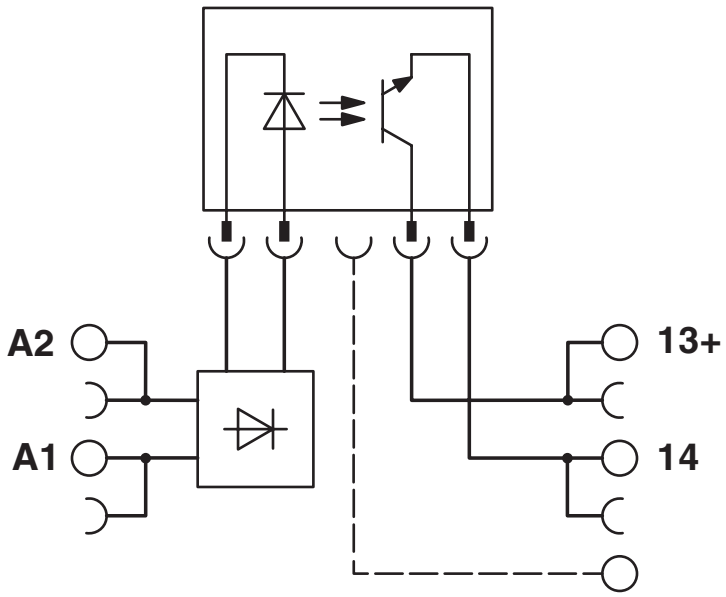

## Approvals

To download certificates, visit the product detail page: https://www.phoenixcontact.com/us/products/2966993

**cULus Listed**
Approval ID: E140324

**cULus Listed**
Approval ID: E140324

**cULus Listed**
Approval ID: E140324

**DNV**
Approval ID: TAE0000196

## Classifications

### ECLASS

| | |
|---|---|
| ECLASS-13.0 | 27371604 |
| ECLASS-15.0 | 27371604 |

### ETIM

| | |
|---|---|
| ETIM 10.0 | EC001504 |

### UNSPSC

| | |
|---|---|
| UNSPSC 21.0 | 39122300 |

## Environmental product compliance

EU RoHS

| | |
|---|---|
| Fulfills EU RoHS substance requirements | Yes |
| Exemption | 7(a), 7(c)-I |

China RoHS

| | |
|---|---|
| Environment friendly use period (EFUP) | EFUP-50 |
| | An article-related China RoHS declaration table can be found in the download area for the respective article under "Manufacturer declaration". For all articles with EFUP-E, no China RoHS declaration table issued and required. |

EU REACH SVHC

| | |
|---|---|
| REACH candidate substance (CAS No.) | Hexahydromethylphthalic anhydride(CAS: n/a) |
| | Lead(CAS: 7439-92-1) |
| SCIP | c62ac7f5-4291-4a4a-bd93-851a1488b15a |

EF3.1 Climate Change

| | |
|---|---|
| CO2e kg | 0.668 kg CO2e |

Phoenix Contact 2026 © - all rights reserved
https://www.phoenixcontact.com

Phoenix Contact USA
586 Fulling Mill Road
Middletown, PA 17057, United States
(+717) 944-1300
info@phoenixcon.com