PLC-RSC- 60DC/21AU - Relay module

2966142

https://www.phoenixcontact.com/us/products/2966142

Please be informed that the data shown in this PDF document is generated from our online catalog. Please find the complete data in the user documentation. Our general terms of use for downloads are valid.



PLC-INTERFACE, consisting of PLC-BSC.../21 basic terminal block with screw connection and plug-in miniature relay with multi-layer gold contact, for mounting on DIN rail NS 35/7,5, 1 changeover contact, input voltage 60 V DC

Your advantages

- Slim design
- Efficient connection to system cabling using V8 adapter
- Safe isolation between coil and contact side
- RT III sealed relay
- Integrated input circuit and interference suppression circuit
- Functional plug-in bridges

Commercial data

Item number	2966142
Packing unit	10 pc
Minimum order quantity	1 pc
Sales key	C461
Product key	DK6227
GTIN	4017918162054
Weight per piece (including packing)	39.54 g
Weight per piece (excluding packing)	34.48 g
Customs tariff number	85364190
Country of origin	DE

Technical data

Product properties

Product type	Relay Module
Product family	PLC-INTERFACE
Application	Universal
Operating mode	100% operating factor
Mechanical service life	2x 10^7 cycles

Data management status

Date of last data management	06.11.2026

Electrical properties

Maximum power dissipation for nominal condition	0.29 W
Test voltage (Winding/contact)	4 kV AC (50 Hz, 1 min., winding/contact)

Insulation characteristics: Coil/contact

Rated insulation voltage	250 V
Rated impulse withstand voltage	6 kV
Overvoltage category	III
Degree of pollution	3

Input data

Coil side

Nominal input voltage U_N	60 V DC
Input voltage range	46.6 V DC ... 84 V DC (20 °C)
Nominal voltage (plugged-in electromechanical relay)	60 V DC
Drive and function	monostable
Drive (polarity)	polarized
Typical input current at U_N	4.8 mA
Typical response time	5 ms
Typical release time	8 ms
Protective circuit	Reverse polarity protection; Polarity protection diode
	Freewheeling diode; Freewheeling diode
Operating voltage display	Yellow LED

Output data

Switching

Contact switching type	1 changeover contact
Type of switch contact	Single contact
Contact material	AgSnO, hard gold-plated
Maximum switching voltage	30 V AC
	36 V DC

Minimum switching voltage	100 mV (10 mA)
Limiting continuous current	50 mA
Maximum inrush current	50 mA
Min. switching current	1 mA (24 V)
Short-circuit current	200 A (conditional short-circuit current)
Interrupting rating (ohmic load) max.	1.2 W (at 24 V DC)
Output fuse	4 A gL/gG NEOZED

Switching: when the gold layer is destroyed

Note	the following values are applicable if a gold layer is destroyed
Maximum switching voltage	250 V AC/DC
Minimum switching voltage	5 V (at 100 mA)
Limiting continuous current	6 A
Min. switching current	10 mA (at 12 V)
Interrupting rating (ohmic load) max.	140 W (at 24 V DC)
	20 W (at 48 V DC)
	18 W (at 60 V DC)
	23 W (at 110 V DC)
	40 W (at 220 V DC)
	1500 VA (for 250 V AC)
Switching capacity	2 A (at 24 V, DC13)
	0.2 A (at 110 V, DC13)
	0.1 A (at 220 V, DC13)
	3 A (at 24 V, AC15)
	3 A (at 120 V, AC15)
	3 A (at 230 V, AC15)

Connection data

Connection method	Screw connection
Stripping length	8 mm
Screw thread	M3
Conductor cross-section rigid	0.14 mm² ... 2.5 mm²
Conductor cross-section flexible	0.14 mm² ... 2.5 mm²
	0.2 mm² ... 2.5 mm² (Single ferrule)
	2x 0.5 mm² ... 1.5 mm² (TWIN ferrule)
Conductor cross-section AWG	26 ... 14
Tightening torque	0.6 Nm ... 0.8 Nm

Dimensions

Item dimensions

Width	6.2 mm
Height	80 mm
Depth	94 mm

Material specifications

Color	gray (RAL 7042)
Flammability rating according to UL 94 (Housing)	V0 (Housing)

Environmental and real-life conditions

Ambient conditions

Degree of protection (Relay base)	IP20 (Relay base)
Ambient temperature (operation)	-40 °C ... 60 °C
Ambient temperature (storage/transport)	-40 °C ... 85 °C

Approvals

CE

Certificate	CE-compliant

UKCA

Certificate	UKCA-compliant

Shipbuilding approval

Certificate	TAE0000196

Corrosive gas test

Identification	ISA-S71.04. G3 Harsh Group
	EN 60068-2-60

Shipbuilding data

Temperature	D
Humidity	A
Vibration	B/C
EMC	B
Enclosure	Required protection according to the Rules shall be provided upon installation on board

EMC data

Electromagnetic compatibility	Conformance with EMC directive
Low Voltage Directive	Conformance with Low Voltage Directive

Standards and regulations

Standards/regulations	IEC 60947-5-1

Mounting

Mounting type	DIN rail mounting
Assembly note	in rows with zero spacing
Mounting position	any

Drawings

Diagram

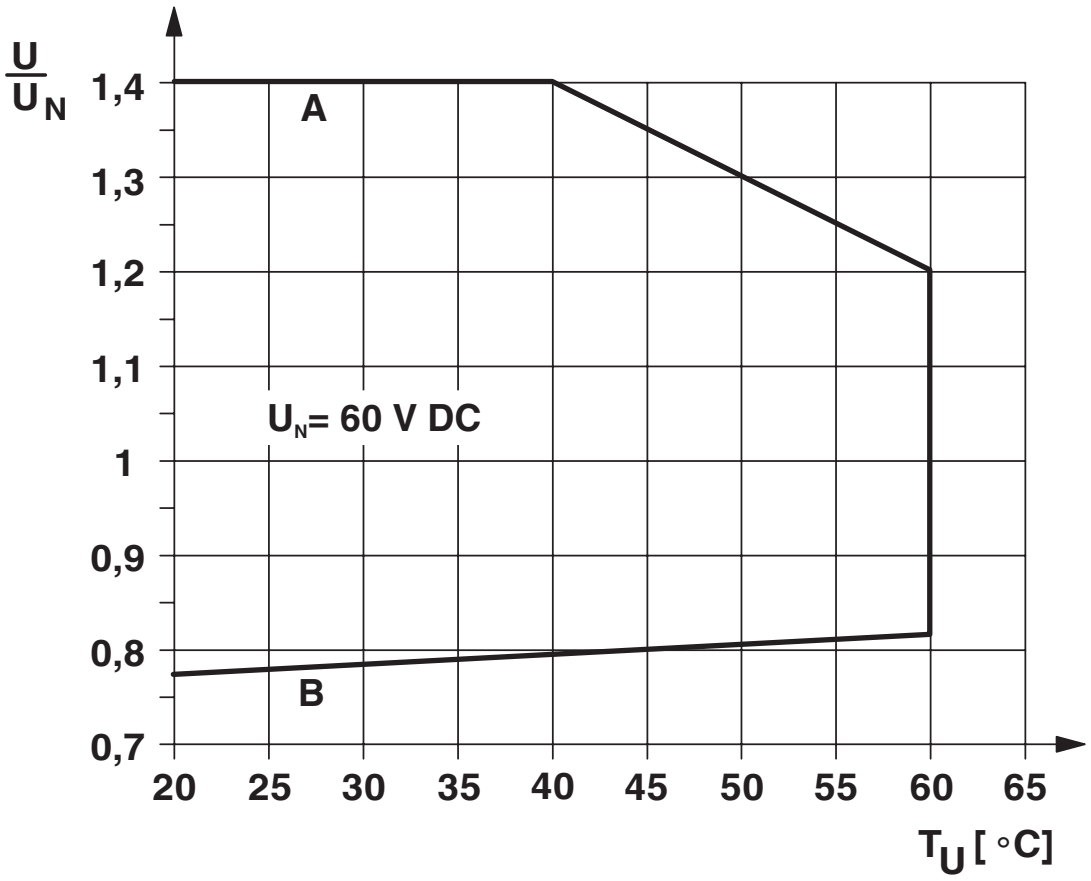

Curve A

Maximum permissible continuous voltage U_{max} with limiting continuous current on the contact side (see relevant technical data)

Curve B

Minimum permissible operate voltage U_{op} after pre-excitation (see relevant technical data)

Diagram

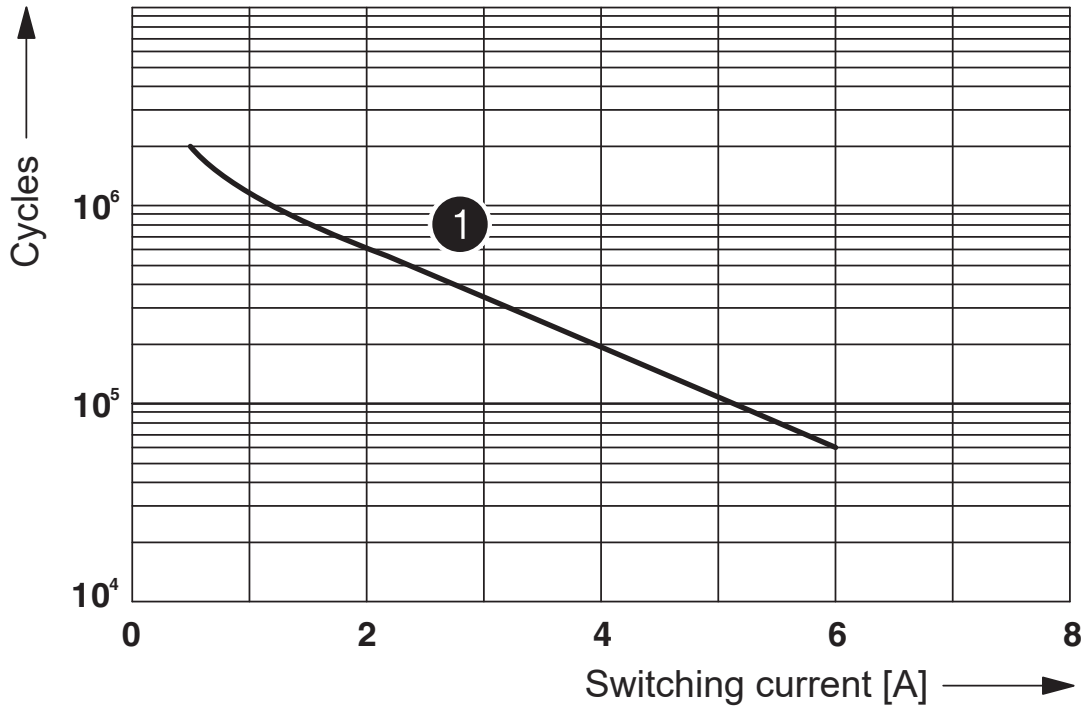

1 250 V AC, ohmic load

Electrical service life

Diagram

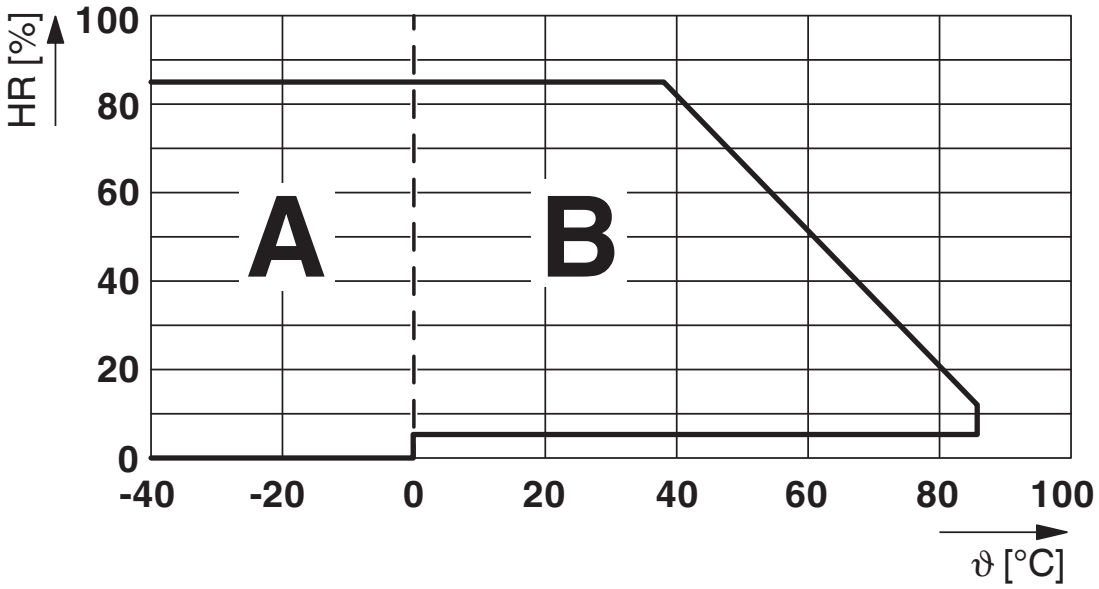

Permissible humidity for operation and storage.
The maximum permissible ambient temperature as specified in the data sheet must be observed.

Area A: Ice buildup at ambient temperatures ≤ 0°C must be prevented
Area B: Condensation at ambient temperatures > 0°C must be prevented

On 30 full days that are naturally distributed across an entire year, a humidity level of 95% is permissible at an ambient temperature ≤ 25°C.

Circuit diagram

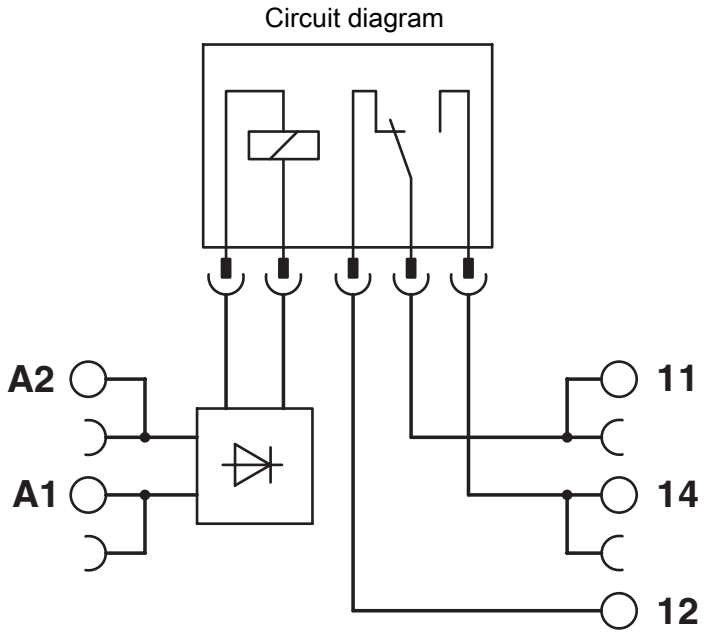

Approvals

To download certificates, visit the product detail page: https://www.phoenixcontact.com/us/products/2966142

cULus Listed
Approval ID: E140324

cULus Listed
Approval ID: E140324

cULus Listed
Approval ID: E140324

DNV
Approval ID: TAE0000196

Classifications

ECLASS

ECLASS-13.0	27371601
ECLASS-15.0	27371601

ETIM

ETIM 10.0	EC001437

UNSPSC

UNSPSC 21.0	39122300

Environmental product compliance

EU RoHS

Fulfills EU RoHS substance requirements	Yes
Exemption	7(a), 7(c)-I

China RoHS

Environment friendly use period (EFUP)	EFUP-50
	An article-related China RoHS declaration table can be found in the download area for the respective article under "Manufacturer declaration". For all articles with EFUP-E, no China RoHS declaration table issued and required.

EU REACH SVHC

REACH candidate substance (CAS No.)	Hexahydromethylphthalic anhydride(CAS: n/a)
	Lead(CAS: 7439-92-1)
SCIP	fb704e61-dff5-4aac-b3ae-4253af9958f7

EF3.1 Climate Change

CO2e kg	0.734 kg CO2e

Phoenix Contact 2026 © - all rights reserved
https://www.phoenixcontact.com

Phoenix Contact USA
586 Fulling Mill Road
Middletown, PA 17057, United States
(+717) 944-1300
info@phoenixcon.com