PSR-SCP- 24UC/THC4/2X1/1X2 - Safety relays

2963721

https://www.phoenixcontact.com/us/products/2963721

Please be informed that the data shown in this PDF document is generated from our online catalog. Please find the complete data in the user documentation. Our general terms of use for downloads are valid.



Safety relay for two-hand control devices in accordance with ISO 13851 type IIIC to SIL 3 or Cat. 4, PL e in accordance with EN ISO 13849, synchronous activation monitoring < 0.5 s, 2 N/O contacts, 1 N/C contact, safe isolation, width: 22.5 mm, pluggable screw terminal block

Your advantages

- For two-hand controls in accordance with ISO 13851 type IIIC
- Up to Cat. 4/PL e in accordance with ISO 13849-1, SIL 3 in accordance with EN IEC 62061, SIL 3 in accordance with IEC 61508
- 2 channel control
- Synchronous activation monitoring < 0.5 s
- Automatic activation
- Two enabling and one signaling current path

ELEKTROGERÄTE RÜCKNAHME

Commercial data

Item number	2963721
Packing unit	1 pc
Minimum order quantity	1 pc
Sales key	DN01
Product key	DNA141
GTIN	4017918818692
Weight per piece (including packing)	186 g
Weight per piece (excluding packing)	163.12 g
Customs tariff number	85371098
Country of origin	DE

Technical data

Notes

Note on application

Note on application	Only for industrial use

Product properties

Product type	Safety relays
Product family	PSRclassic
Application	Two-hand control
	Safety door
Mechanical service life	approx. 10^7 cycles
Relay type	Electromechanical relay with force-guided contacts in accordance with IEC/EN 61810-3

Insulation characteristics

Overvoltage category	II, III (See the section “Insulation coordination”)
Degree of pollution	2

Times

Typical response time	50 ms (automatic start)
Typical release time	90 ms (on demand via the sensor circuit)
	20 ms (on demand via A1)
Delay time	< 500 ms (fixed setting)
Restart time	< 1 s (Boot time, after switching on the supply voltage)
Recovery time	< 500 ms (following demand of the safety function)

Electrical properties

Maximum power dissipation for nominal condition	16.6 W (U_S = 26.4 V, I_L^2 = 72 A², $P_{Total\ max}$ = 2.2 W + 14.4 W)
Nominal operating mode	100% operating factor
Rated insulation voltage	250 V
Rated surge voltage/insulation	6 kV / Safe isolation, increased insulation

Supply

Designation	A1/A2
Rated control circuit supply voltage U_S	24 V AC/DC -15 %; +10 %
Rated control supply current I_S	125 mA AC (at U_S)
	60 mA DC (at U_S)
Power consumption at U_S	typ. 1.6 W
Apparent power	3.6 VA (at U_S)
Protective circuit	Serial protection against polarity reversal
	Surge protection
	Suppressor diode

Input data

Digital: Sensor circuit (S11, S21)

Description of the input	safety-related sensor inputs
Number of inputs	2
Input voltage range "0" signal	0 V DC ... 5 V DC
Input voltage range "1" signal	> 18.5 V
Input current range "0" signal	0 mA ... 2 mA
Filter time	No test pulses permitted
Concurrence	< 500 ms
Max. permissible overall conductor resistance	50 Ω
Protective circuit	Suppressor diode
Current consumption	< 100 mA (typ. with U_S)

Digital: Feedback circuit (Y1, Y2)

Description of the input	non-safety-related
Number of inputs	1
Input voltage range "1" signal	> 18.5 V
Filter time	No test pulses permitted
Max. permissible overall conductor resistance	50 Ω

Output data

Relay: Enabling current paths (13/14, 23/24)

Output description	2 N/O contacts each in series, safety-related, floating
Number of outputs	2
Contact switching type	2 enabling current paths
Contact material	$AgSnO_2$
Switching voltage	min. 15 V AC/DC
	max. 250 V AC/DC
Switching power	min. 100 mW
Inrush current	min. 10 mA
	max. 6 A
Switching capacity	6 A (DC13)
	5 A (AC15)
Limiting continuous current	6 A (observe derating)
Sq. Total current	72 A^2 (observe derating)
Switching frequency	max. 0.1 Hz
Mechanical service life	10x 10^6 cycles
Output fuse	10 A gL/gG
	4 A gL/gG (for low-demand applications)

Relay: Signaling current path (31/32)

Output description	2 N/C contacts parallel, non-safety-related, floating
Number of outputs	1
Contact switching type	1 signaling current path
Contact material	$AgSnO_2$

Switching voltage	min. 15 V AC/DC
	max. 250 V AC/DC
Switching power	min. 100 mW
Inrush current	min. 10 mA
	max. 5 A
Switching capacity	1.5 A (AC15)
	2 A (DC13)
Limiting continuous current	5 A
Sq. Total current	25 A^2
Switching frequency	max. 0.1 Hz
Mechanical service life	10x 10^6 cycles
Output fuse	5 A gL/gG

Connection data

Connection technology

pluggable	yes

Conductor connection

Connection method	Screw connection
Conductor cross-section rigid	0.2 mm² ... 2.5 mm²
Conductor cross-section flexible	0.2 mm² ... 2.5 mm²
Conductor cross-section AWG	24 ... 12
Stripping length	7 mm
Screw thread	M3

Signaling

Status display	2 x LED (green)
Operating voltage display	1 x green LED (PWR)

Dimensions

Width	22.5 mm
Height	99 mm
Depth	114.5 mm

Material specifications

Color (Housing)	yellow (RAL 1018)
Housing material	PA

Characteristics

Safety data

Stop category (EN 60204-1)	0
Type class	IIIC

Safety data: EN ISO 13849

Performance level (PL)	e

Safety data: IEC 61508 - High demand

Safety Integrity Level (SIL)	3

Safety data: IEC 61508 - Low demand

Safety Integrity Level (SIL)	3

Safety data: EN IEC 62061

Safety Integrity Level (SIL)	3

Environmental and real-life conditions

Ambient conditions

Degree of protection	IP20
Min. degree of protection of inst. location	IP54
Ambient temperature (operation)	-20 °C ... 55 °C
Ambient temperature (storage/transport)	-40 °C ... 70 °C
Maximum altitude	≤ 2000 m (Above sea level)
Max. permissible humidity (storage/transport)	75 % (on average, 85% infrequently, non-condensing)
Max. permissible relative humidity (operation)	75 % (on average, 85% infrequently, non-condensing)
Shock	15g
Vibration (operation)	10 Hz ... 150 Hz, 2g

Approvals

Conformity/Approvals

Conformance	CE-compliant

Mounting

Mounting type	DIN rail mounting
Assembly note	See derating curve
Mounting position	vertical or horizontal

Drawings

Circuit diagram

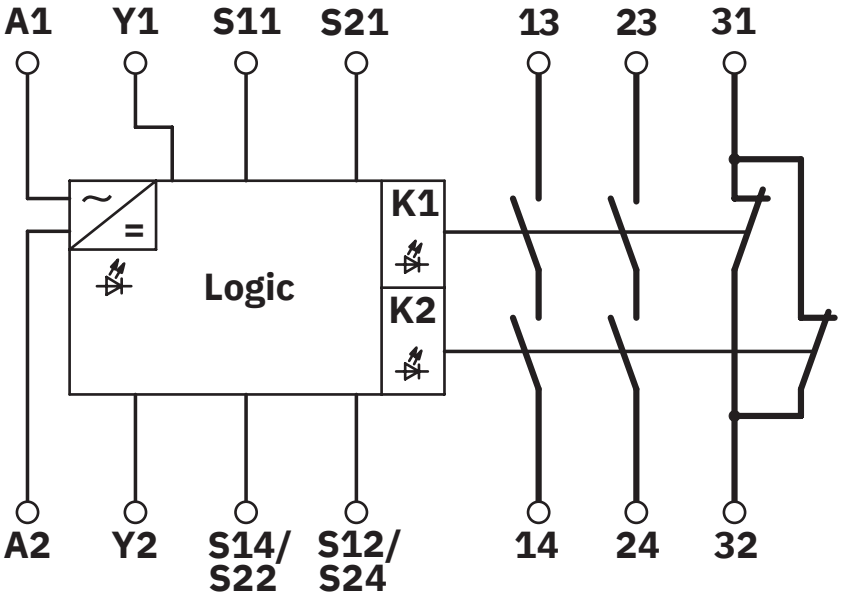

Block diagram

Circuit diagram

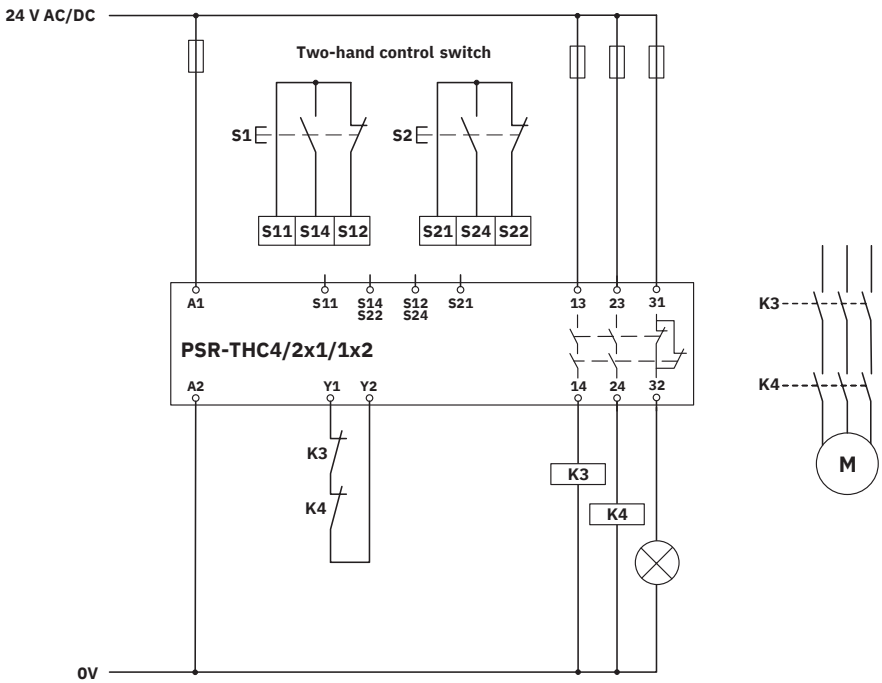

Two-hand control device

Approvals

To download certificates, visit the product detail page: https://www.phoenixcontact.com/us/products/2963721

cULus Listed
Approval ID: E140324

Functional Safety
Approval ID: 01/205/0542.04/23

Classifications

ECLASS

ECLASS-13.0	27371821
ECLASS-15.0	27371821

ETIM

ETIM 10.0	EC001452

UNSPSC

UNSPSC 21.0	39121100

Environmental product compliance

EU RoHS

Fulfills EU RoHS substance requirements	Yes
Exemption	7(a), 7(a)-I, 7(c)-I

China RoHS

Environment friendly use period (EFUP)	EFUP-50
	An article-related China RoHS declaration table can be found in the download area for the respective article under "Manufacturer declaration". For all articles with EFUP-E, no China RoHS declaration table issued and required.

EU REACH SVHC

REACH candidate substance (CAS No.)	Lead(CAS: 7439-92-1)
SCIP	ad09c00b-7a7f-44ce-99b7-1943080c4694

Phoenix Contact 2026 © - all rights reserved
https://www.phoenixcontact.com

Phoenix Contact USA
586 Fulling Mill Road
Middletown, PA 17057, United States
(+717) 944-1300
info@phoenixcon.com