UM 45-FLK14/ 8IM/PLC - Passive module

2962887

https://www.phoenixcontact.com/us/products/2962887

Please be informed that the data shown in this PDF document is generated from our online catalog. Please find the complete data in the user documentation. Our general terms of use for downloads are valid.

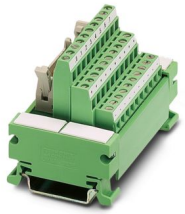

VARIOFACE COMPACT LINE, sensor module for the connection of 8 p-n-p sensors, for assembly on DIN rail NS 35/7.5, screw connection

Commercial data

Item number	2962887
Packing unit	1 pc
Minimum order quantity	1 pc
Sales key	C421
Product key	DK21A1
GTIN	4017918087487
Weight per piece (including packing)	106 g
Weight per piece (excluding packing)	73.67 g
Customs tariff number	85369010
Country of origin	DE

Technical data

Product properties

Product type	Interface module
Product family	VARIOFACE
Number of positions	14
No. of channels	8

Insulation characteristics: Air clearances and creepage distances

Insulation	Functional insulation
Overvoltage category	II
Pollution degree	2

Electrical properties

Operating voltage (AC)	≤ 30 V AC
Operating voltage (DC)	≤ 60 V DC
Current (per branch)	≤ 1 A
Current (Voltage supply)	≤ 3 A

Air clearances and creepage distances

Rated insulation voltage	63 V
Rated surge voltage	0.6 kV (1.2/50 µs)

Supported controller: ABB S800 I/O

Suitable I/O card	DI810
	DI811
	DI814
	DI818
	DI830
	DI831
	DI840
	DO810
	DO814
	DO818
	DO840

Supported controller: SIEMENS S7-400

Suitable I/O card	6ES7421-1BL01-0AA0
	6ES7422-1BL00-0AA0
	6ES7422-7BL00-0AB0

Supported controller: GE-FANUC 90-30

Suitable I/O card	IC693 MDL241
	IC693 MDL634
	IC693 MDL645

	IC693 MDL646
	IC693 MDL732
	IC693 MDL733
	IC693 MDL740
	IC693 MDL741
	IC693 MDL742

Supported controller: ALLEN-BRADLEY ControlLogix

Suitable I/O card	1756-IB32
	1756-OB32
	1756-IN16
	1756-IB16
	1756-IC16
	1756-OB16E

Supported controller: ALLEN-BRADLEY PLC 5

Suitable I/O card	1771 IBN
	1771 OBN

Supported controller: ALLEN-BRADLEY SLC 500

Suitable I/O card	1746 OB16
	1746 OV16
	1746 OG16
	1746 IA16
	1746 ITB16
	1746 IN16
	1746 IV16
	1746 ITV16
	1746 IG16
	1746 OB 32
	1746 OV 32
	1746 IB 32
	1746 IV 32
	1746 IB16

Supported controller: HONEYWELL Experion PKS C200

Suitable I/O card	TC-IDD 321
	TC-ODD 321

Supported controller: MITSUBISHI MELSEC Q

Suitable I/O card	QX81
	QY81P

Supported controller: SCHNEIDER ELECTRIC Modicon TSX QUANTUM

Suitable I/O card	DDI 353
	DDI 853
	DAI 353

	DAI 453
	DDO 353

Supported controller: SIEMENS S7-300 / ET 200 M

Suitable I/O card	CPU 313C-2DP
	CPU 314C-2DP
	CPU 314C-2PtP
	6ES7321-1BH02-0AA0
	6ES7321-1BL00-0AA0
	6ES7322-1BH01-0AA0
	6ES7322-1BL00-0AA0
	6ES7323-1BH01-0AA0
	6ES7323-1BL00-0AA0
	6ES7321-1BH10-0AA0
	6ES7322-1BH10-0AA0
	CPU 313C
	CPU 313C-2PtP

Connection data

Connection 1 (control level)

Connection in acc. with standard	IEC 60603-13
Connection method	IDC/FLK pin strip
Number of connections	1
Number of positions	14
Insertion/withdrawal cycles	> 50
Pitch	2.54 mm

Connection 2 (field level)

Connection method	Screw connection
Stripping length	8 mm
Screw thread	M3
Number of positions	30
Conductor cross-section rigid	0.14 mm² ... 1.5 mm²
Conductor cross-section flexible	0.25 mm² ... 1 mm² (Ferrule without plastic sleeve)
	0.25 mm² ... 1.5 mm² (Ferrule with plastic sleeve)
Conductor cross-section AWG	26 ... 16
Tightening torque	0.5 Nm ... 0.6 Nm
Pitch	5.08 mm

Signaling

Status display present	no

Dimensions

Item dimensions

Width	74.8 mm
Height	45 mm
Depth	52.37 mm

Material specifications

Color	green (RAL 6021)
Housing insulation material	PVC

Environmental and real-life conditions

Ambient conditions

Degree of protection (Module)	IP00
Degree of protection (Installation location)	≥ IP54
Ambient temperature (operation)	-20 °C ... 50 °C
Ambient temperature (storage/transport)	-20 °C ... 70 °C
Altitude	≤ 2000 m

Approvals

UKCA

Certificate	UKCA-compliant

Standards and regulations

Air clearances and creepage distances

Standards/regulations	EN IEC 60664-1

Mounting

Mounting type	DIN rail mounting
Mounting position	any

Notes

Notes on operation	For proper use, the specifications of the installation directive (see Downloads) must be observed. For applications or use with third-party products, the specifications, and the safety and warning instructions of the respective third-party manufacturer must also be met.

Drawings

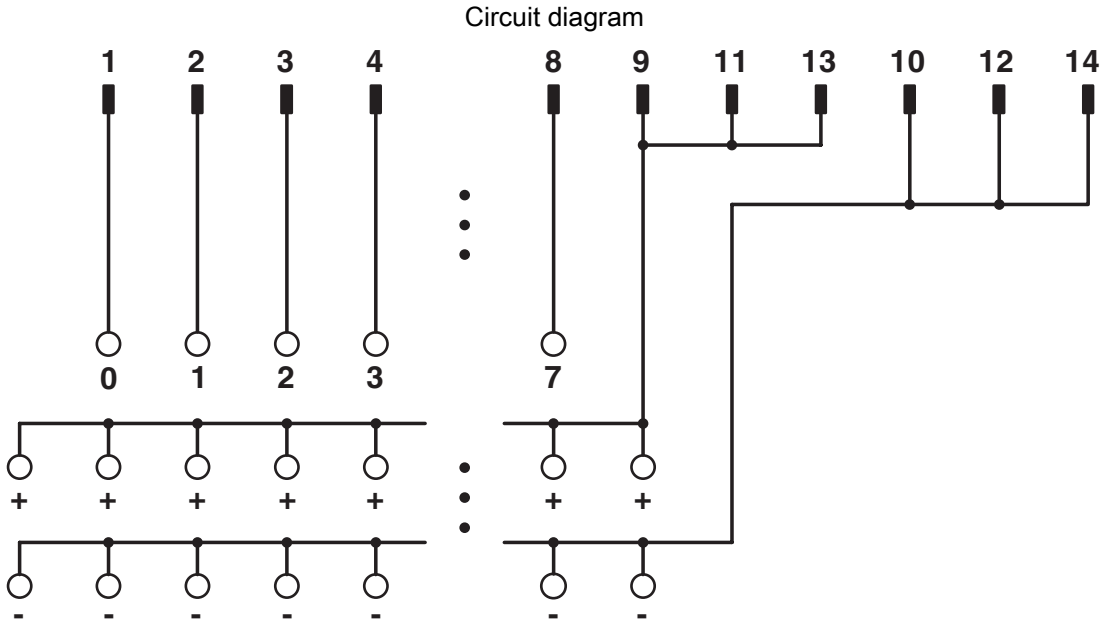

UM 45-FLK14/8IM/PLC connection scheme

Classifications

ECLASS

ECLASS-13.0	27141152
ECLASS-15.0	27141152

ETIM

ETIM 10.0	EC002780

UNSPSC

UNSPSC 21.0	39121400

Environmental product compliance

EU RoHS

Fulfills EU RoHS substance requirements	Yes, No exemptions

China RoHS

Environment friendly use period (EFUP)	EFUP-50
	An article-related China RoHS declaration table can be found in the download area for the respective article under "Manufacturer declaration". For all articles with EFUP-E, no China RoHS declaration table issued and required.

EU REACH SVHC

REACH candidate substance (CAS No.)	No substance above 0.1 wt%

Phoenix Contact 2026 © - all rights reserved
https://www.phoenixcontact.com

Phoenix Contact USA
586 Fulling Mill Road
Middletown, PA 17057, United States
(+717) 944-1300
info@phoenixcon.com