UM 25/45-FEO 200 - Foot element

2959434

https://www.phoenixcontact.com/us/products/2959434

Please be informed that the data shown in this PDF document is generated from our online catalog. Please find the complete data in the user documentation. Our general terms of use for downloads are valid.



Foot element, is inserted in the profile housing, limit stop with screw. Mounted at right angles to the NS 35/7.5 DIN rail

Your advantages

- Easy installation
- Flexible size and shape
- Inexpensive as a result of reducing the number of separate housing parts

Commercial data

Item number	2959434
Packing unit	10 pc
Minimum order quantity	10 pc
Sales key	AC13
Product key	ACHDBA
GTIN	4017918117610
Weight per piece (including packing)	6.71 g
Weight per piece (excluding packing)	6.66 g
Customs tariff number	39269097
Country of origin	PL

Technical data

Product properties

Product type	Base latches
Housing type	Press-drawn section housings
Housing series	UM
Product family	UM

Material specifications

Material Housing	PA
Flammability rating according to UL 94	V0

Drawings

Dimensional drawing

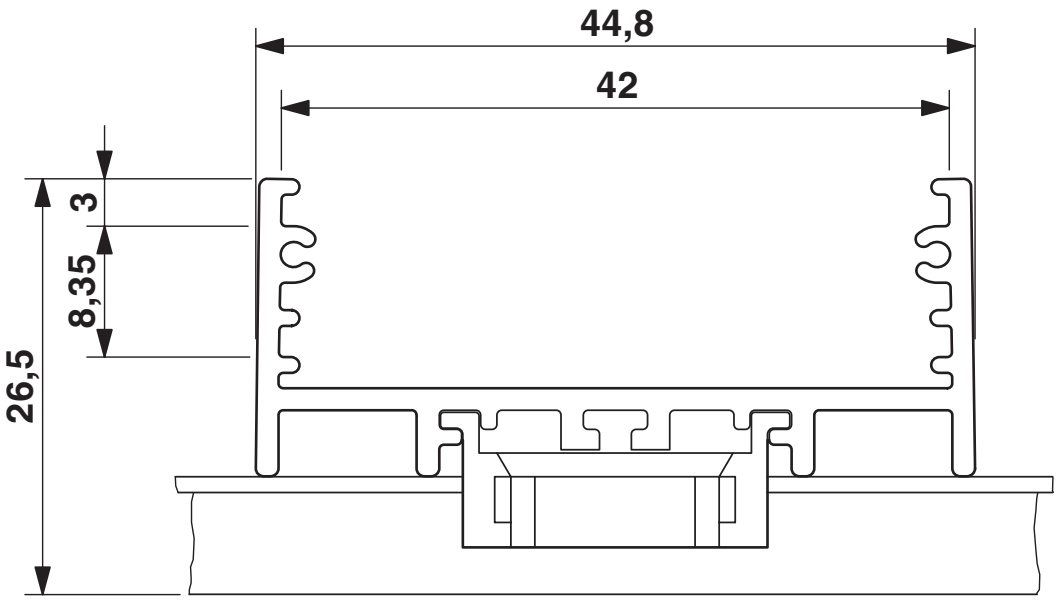

Dimensional drawing

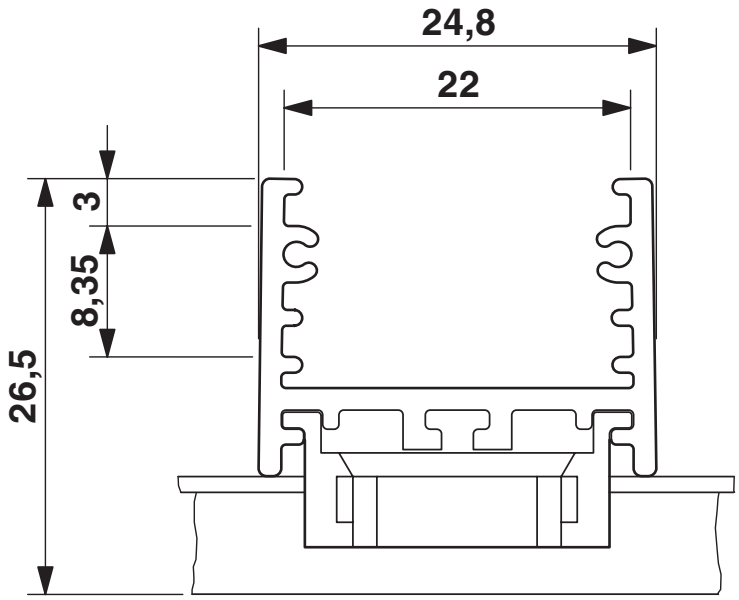

Approvals

To download certificates, visit the product detail page: https://www.phoenixcontact.com/us/products/2959434

UL Recognized
Approval ID: E240868

Classifications

ECLASS

ECLASS-13.0	27190605
ECLASS-15.0	27190605

ETIM

ETIM 10.0	EC002779

UNSPSC

UNSPSC 21.0	31261500

Environmental product compliance

EU RoHS

Fulfills EU RoHS substance requirements	Yes, No exemptions

China RoHS

Environment friendly use period (EFUP)	EFUP-E
	No hazardous substances above the limits

EU REACH SVHC

REACH candidate substance (CAS No.)	No substance above 0.1 wt%

EF3.1 Climate Change

CO2e kg	0.042 kg CO2e

Phoenix Contact 2026 © - all rights reserved
https://www.phoenixcontact.com

Phoenix Contact USA
586 Fulling Mill Road
Middletown, PA 17057, United States
(+717) 944-1300
info@phoenixcon.com