# PT 1X2-24DC/FM-ST - Surge protection plug

2920078

https://www.phoenixcontact.com/us/products/2920078

Please be informed that the data shown in this PDF document is generated from our online catalog. Please find the complete data in the user documentation. Our general terms of use for downloads are valid.






Surge protection plug with integrated diagnostic and status indicator on the module and remote indication contact for a 2-wire floating signal circuit.

## Your advantages

- Easy testing and documentation with CHECKMASTER 2 with pluggable protective modules
- Maximum ease of maintenance, thanks to the 2-piece design
- Easy selection for all possible demands in MCR applications with a complete product portfolio
- The signal is not influenced during maintenance work, thanks to the impedance-neutral insertion and removal of protective plugs
- Permanent protective device monitoring with optical signaling via LED

ELEKTROGERÄTE RÜCKNAHME

## Commercial data

| | |
|---|---|
| Item number | 2920078 |
| Packing unit | 10 pc |
| Minimum order quantity | 10 pc |
| Sales key | CL21 |
| Product key | CL2112 |
| GTIN | 4046356154000 |

| | |
|---|---|
| Weight per piece (including packing) | 29.8 g |
| Weight per piece (excluding packing) | 27.05 g |
| Customs tariff number | 85363010 |
| Country of origin | DE |

## Technical data

### Product properties

| | |
|---|---|
| Product type | Surge protection for MCR technology |
| Product family | PLUGTRAB PT |
| IEC test classification | C1 |
| | C2 |
| | C3 |
| | D1 |
| VDE requirement class | C1 |
| | C2 |
| | C3 |
| | D1 |
| Type | Male |
| Wire pairs per module | 1 |

Insulation characteristics

| | |
|---|---|
| Pollution degree | 2 |

### Electrical properties

| | |
|---|---|
| Nominal voltage $U_N$ | 24 V DC |

Indicator/remote signaling

| | |
|---|---|
| Switching function | N/C contact |
| Maximum operating voltage $U_{max.}$ AC | 250 V AC |
| Max. operating current $I_{max}$ | 0.2 A (250 V AC) |
| | 0.2 A (220 V DC) |
| | 1 A (60 V AC) |
| | 1 A (60 V DC) |

### Connection data

| | |
|---|---|
| Connection method | Screw connection (in connection with the base element) |
| Screw thread | M3 |
| Tightening torque | 0.8 Nm |
| Conductor cross-section flexible | 0.2 mm² ... 2.5 mm² |
| Conductor cross-section rigid | 0.2 mm² ... 4 mm² |
| Conductor cross-section AWG | 24 ... 12 |

### Dimensions

| | |
|---|---|
| Dimensional drawing | 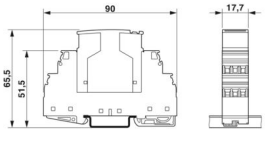 |

| | |
|---|---|
| Width | 17.7 mm |
| Height | 45 mm |
| Depth | 52 mm |
| Horizontal pitch | 1 HP |
| Complete module width | 17.7 mm |
| Complete module height | 90 mm |
| Complete module depth | 65.5 mm |

## Material specifications

| | |
|---|---|
| Color | black (RAL 9005) |
| Flammability rating according to UL 94 | V-0 |
| Housing material | PA 6.6 |

## Mechanical properties

Mechanical data

| | |
|---|---|
| Open side panel | No |

## Protective circuit

| | |
|---|---|
| Direction of action | Line-Line & Line-Signal Ground/Shield & optional Signal Ground/Shield-Earth Ground |
| Nominal voltage $U_N$ | 24 V DC |
| Maximum continuous operating voltage $U_C$ | 28 V DC |
| | 20 V AC |
| Rated current | 450 mA (45 °C) |
| Operating effective current $I_C$ at $U_C$ | ≤ 5 µA |
| Standby power consumption $P_C$ | ≤ 1.78 VA |
| Protective conductor current $I_{PE}$ | ≤ 2 µA (Directly grounded) |
| | ≤ 1 µA (with PT 1X2+F-BE) |
| Nominal discharge current $I_n$ (8/20) µs (line-line) | 10 kA |
| Nominal discharge current $I_n$ (8/20) µs (line-ground) | 10 kA |
| Pulse discharge current $I_{imp}$ (10/350) µs | 2.5 kA |
| Total discharge current $I_{Total}$ (8/20) µs | 20 kA |
| Max. discharge current $I_{max}$ (8/20) µs maximum (line-line) | 10 kA |
| Max. discharge current $I_{max}$ (8/20) µs maximum (line-earth) | 10 kA |
| Nominal pulse current Ian (10/1000) µs (line-line) | 33 A (25 °C) |
| Output voltage limitation at 1 kV/µs (line-line) spike | ≤ 45 V |
| Output voltage limitation at 1 kV/µs (line-earth) spike | ≤ 450 V |
| | ≤ 1 kV (with PT 1X2+F-BE) |
| Output voltage limitation at 1 kV/µs (line-line) static | ≤ 40 V |
| Residual voltage at $I_n$ (conductor-conductor) | ≤ 40 V |
| Residual voltage with Ian (10/1000) µs (line-line) | ≤ 50 V |
| Voltage protection level $U_p$ (line-line) | ≤ 40 V (C1 - 500 V / 250 A) |
| | ≤ 40 V (C3 - 25 A) |
| Voltage protection level $U_p$ (line-earth) | ≤ 450 V (C2 - 10 kV / 5 kA) |

| | |
|---|---|
| Response time $t_A$ (line-line) | ≤ 1 ns |
| Response time $t_A$ (line-earth) | ≤ 100 ns |
| Input attenuation aE, sym. | typ. 0.5 dB (≤ 1 MHz / 50 Ω) |
| | typ. 0.2 dB (≤ 400 kHz / 150 Ω) |
| Cut-off frequency fg (3 dB), sym. in 50 Ω system | typ. 6 MHz |
| Cut-off frequency fg (3 dB), sym. in 150 Ω system | typ. 2.5 MHz |
| Capacity (Core-Core) | typ. 1.4 nF |
| Capacity (Core-Earth) | typ. 4 pF |
| Resistance per path | 2.2 Ω ±10 % (7-8/11-12) |
| Surge protection fault message | Optical, remote indicator contact |
| Max. required back-up fuse | 500 mA (T) |
| Impulse durability (line-line) | C2 - 10 kV / 5 kA |
| | C3 - 25 A |
| Impulse durability (line-earth) | C2 - 10 kV / 5 kA |
| | D1 - 2.5 kA |
| | C3 - 100 A |
| Alternating current carrying capacity (line-earth) | 5 A - 1 s |

## Environmental and real-life conditions

### Ambient conditions

| | |
|---|---|
| Degree of protection | IP20 |
| Ambient temperature (operation) | -40 °C ... 85 °C |

## Standards and regulations

| | |
|---|---|
| VDE requirement class | C1 |
| | C2 |
| | C3 |
| | D1 |

### Air clearances and creepage distances

| | |
|---|---|
| Standards/regulations | VDE 0110-1 / IEC 60664-1 |
| Standards/specifications | IEC 61643-21 |
| Note | 2002 |

## Mounting

| | |
|---|---|
| Mounting type | on base element |

## Drawings

Dimensional drawing

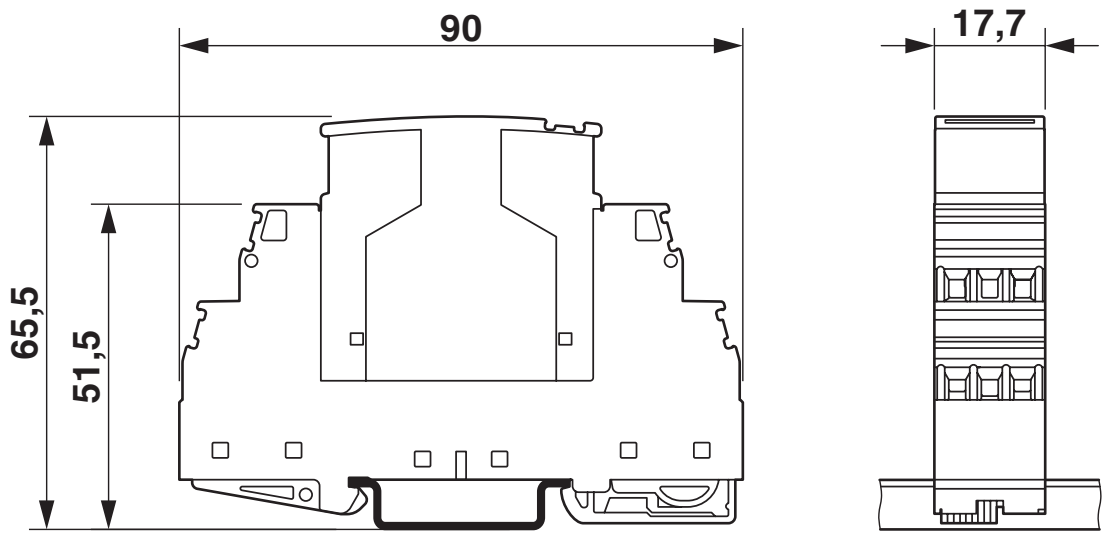


The figure shows the complete module consisting of a base element and connector

Circuit diagram

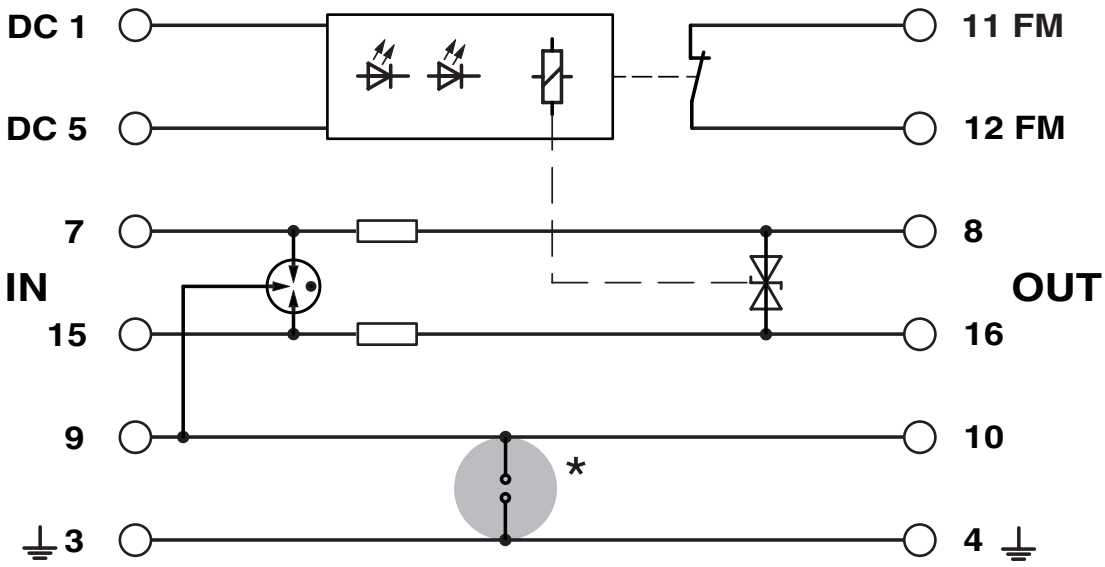

## Approvals

To download certificates, visit the product detail page: https://www.phoenixcontact.com/us/products/2920078

**UL Listed**
Approval ID: FILE E 138168

## Classifications

### ECLASS

| | |
|---|---|
| ECLASS-13.0 | 27171501 |
| ECLASS-15.0 | 27171501 |

### ETIM

| | |
|---|---|
| ETIM 10.0 | EC001466 |

### UNSPSC

| | |
|---|---|
| UNSPSC 21.0 | 39121600 |

## Environmental product compliance

EU RoHS

| | |
|---|---|
| Fulfills EU RoHS substance requirements | Yes |
| Exemption | 7(a), 7(c)-I |

China RoHS

| | |
|---|---|
| Environment friendly use period (EFUP) | EFUP-50 |
| | An article-related China RoHS declaration table can be found in the download area for the respective article under "Manufacturer declaration". For all articles with EFUP-E, no China RoHS declaration table issued and required. |

EU REACH SVHC

| | |
|---|---|
| REACH candidate substance (CAS No.) | Lead(CAS: 7439-92-1) |
| | 2,2',6,6'-tetrabromo-4,4'-isopropylidenediphenol(CAS: 79-94-7) |
| SCIP | a03b3fa0-3b19-4ba0-8002-a635b02ed1cc |

Phoenix Contact 2026 © - all rights reserved
https://www.phoenixcontact.com

Phoenix Contact USA
586 Fulling Mill Road
Middletown, PA 17057, United States
(+717) 944-1300
info@phoenixcon.com