ST-OE3- 60DC/ 48DC/100 - Solid-state relay

2911045

https://www.phoenixcontact.com/us/products/2911045

Please be informed that the data shown in this PDF document is generated from our online catalog. Please find the complete data in the user documentation. Our general terms of use for downloads are valid.



The figure shows version ST-OV 3-5 DC/ 48 DC/100

Plug-in input solid-state relay, with LED and protective circuit in input and output circuits, input: 48 - 60 V DC, output: 8 - 48 V DC/max. 100 mA, can be plugged into basic terminal blocks

Commercial data

Item number	2911045
Packing unit	10 pc
Minimum order quantity	1 pc
Note	Made to order (non-returnable)
Sales key	C460
Product key	DK61B1
GTIN	4017918079475
Weight per piece (including packing)	27.93 g
Weight per piece (excluding packing)	27.55 g
Customs tariff number	85364190
Country of origin	DE

Technical data

Product properties

Product type	Single solid-state relay

Data management status

Date of last data management	01.04.2026

Electrical properties

Test voltage (Input/output)	2.5 kV AC (Input/output)

Input data

Nominal input voltage U_N	60 V DC
Input voltage range in reference to U_N	0.72 ... 1.1
Input voltage range	43.2 V DC ... 66 V DC
Switching threshold "0" signal in reference to U_N	≤ 0.4
Switching threshold "1" signal in reference to U_N	≥ 0.8
Typical input current at U_N	9 mA
Typical response time	50 µs
Typical turn-off time	100 µs
Status display	LED (yellow)
Protective circuit	Reverse polarity protection; Polarity protection diode
	Surge protection
Transmission frequency	300 Hz

Output data

Design of digital output	electronic
Output voltage range	8 V DC ... 48 V DC
Limiting continuous current	100 mA
Voltage drop at max. limiting continuous current	1.2 V
Output circuit	2-conductor floating, 3-conductor ground-referenced
Protective circuit	Reverse polarity protection; Polarity protection diode
	Free running; Freewheeling diode
Output resistor	approx. 22 kΩ (for 3-wire connection)

Dimensions

Item dimensions

Width	20.8 mm
Height	33 mm
Depth	66.5 mm

Material specifications

Color	green (RAL 6021)

Environmental and real-life conditions

Ambient conditions

Ambient temperature (operation)	-20 °C ... 60 °C
Ambient temperature (storage/transport)	-20 °C ... 70 °C

Standards and regulations

Standards/regulations	IEC 60664
	IEC 60664A
	DIN VDE 0110

Mounting

Mounting position	any

Drawings

Circuit diagram

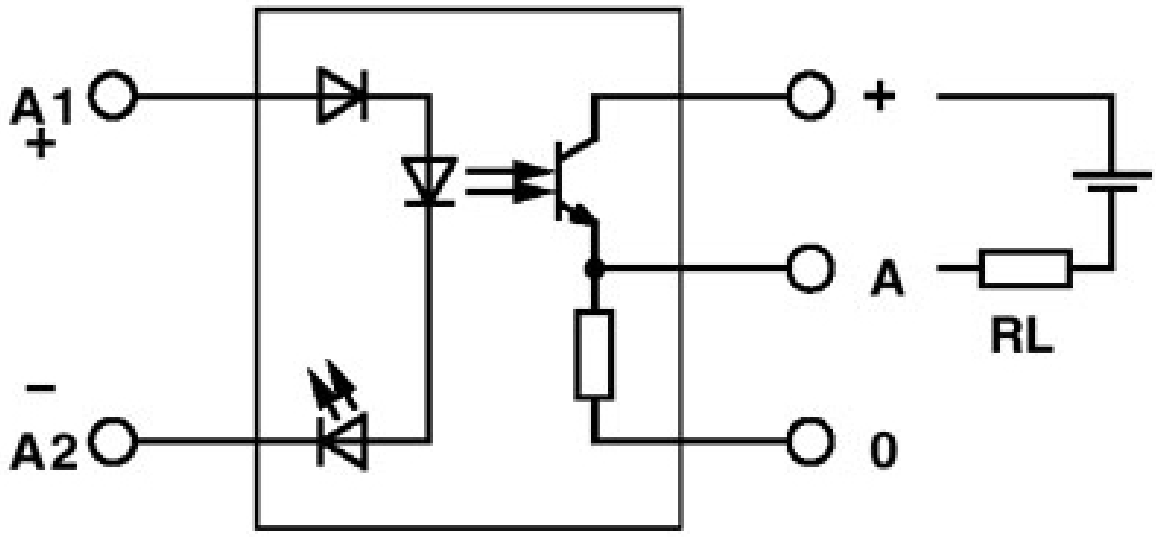

Output: 2-conductor, floating, positive switching

Circuit diagram

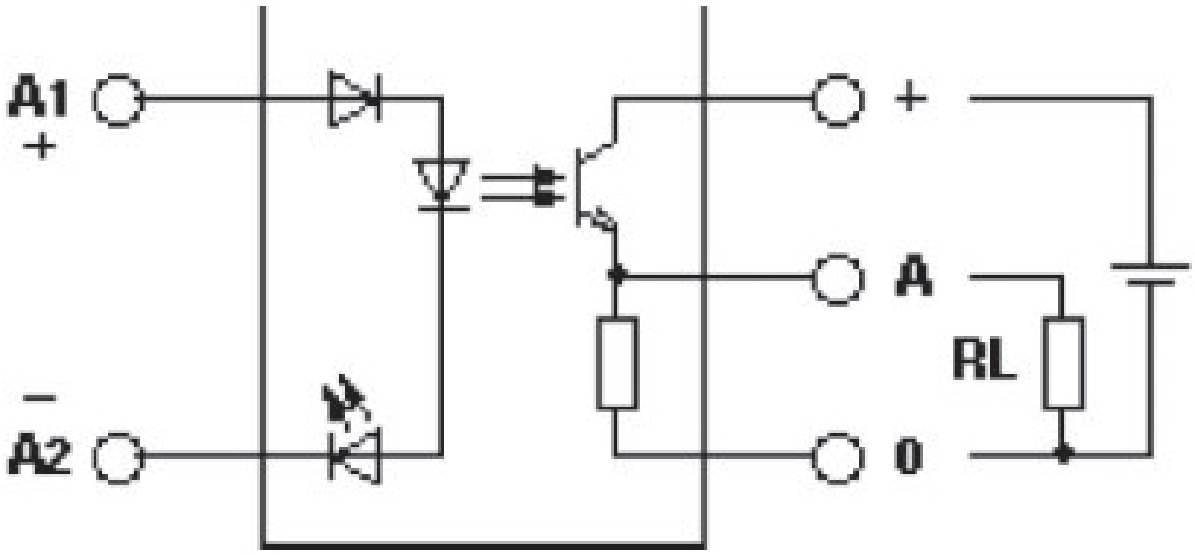

Circuit diagram

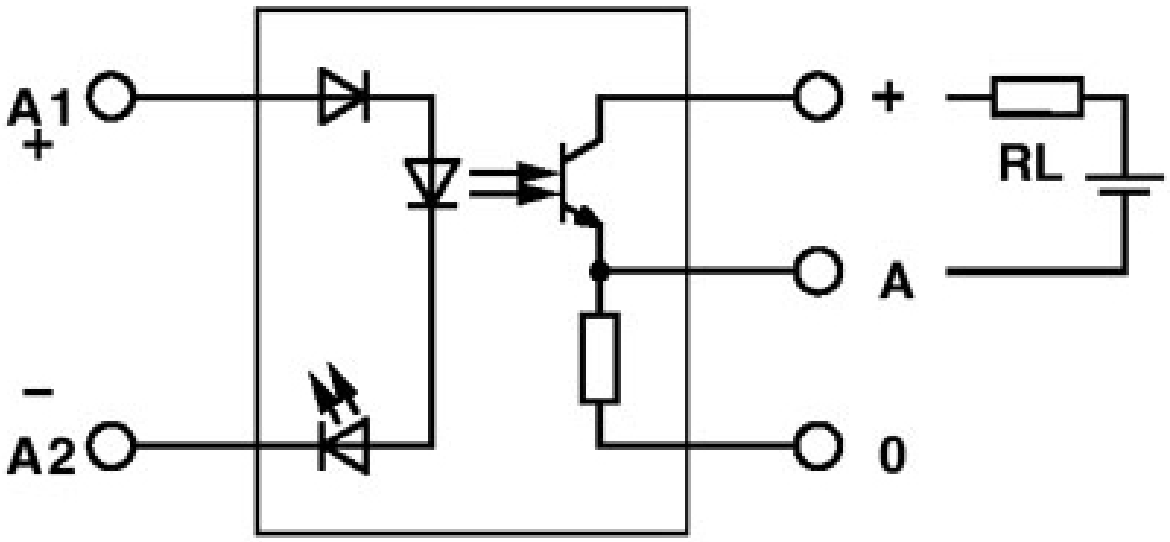

Output: 2-conductor, floating, negative switching

Circuit diagram

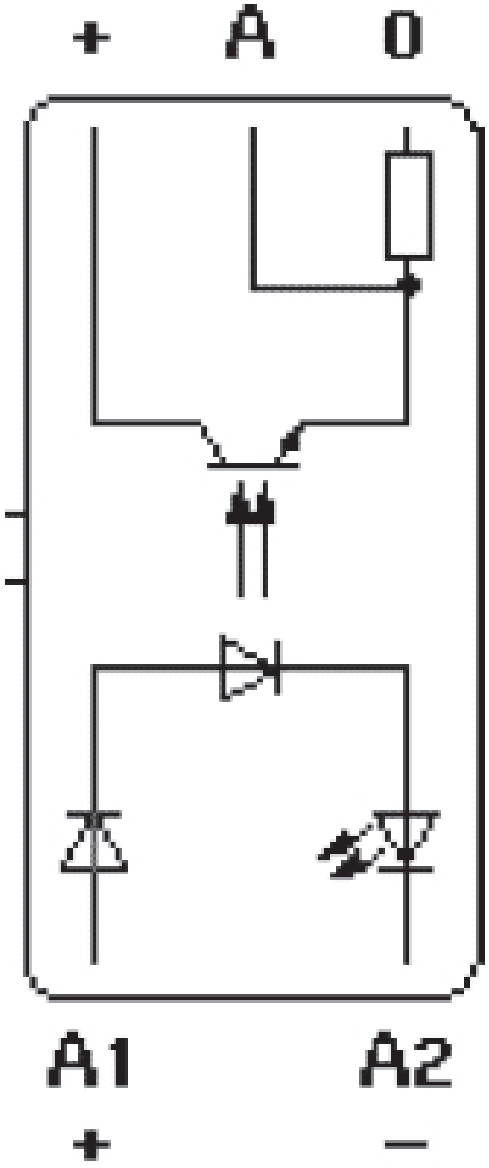

Classifications

ECLASS

ECLASS-13.0	27371604
ECLASS-15.0	27371604

ETIM

ETIM 10.0	EC001504

UNSPSC

UNSPSC 21.0	39122300

Environmental product compliance

EU RoHS

Fulfills EU RoHS substance requirements	Yes
Exemption	7(a), 7(c)-I

China RoHS

Environment friendly use period (EFUP)	EFUP-50
	An article-related China RoHS declaration table can be found in the download area for the respective article under "Manufacturer declaration". For all articles with EFUP-E, no China RoHS declaration table issued and required.

EU REACH SVHC

REACH candidate substance (CAS No.)	Hexahydromethylphthalic anhydride(CAS: n/a)
	Lead(CAS: 7439-92-1)
SCIP	6302956d-4a9d-4c3e-82dc-0ea22831b9ef

EF3.1 Climate Change

CO2e kg	1.008 kg CO2e

Phoenix Contact 2026 © - all rights reserved
https://www.phoenixcontact.com

Phoenix Contact USA
586 Fulling Mill Road
Middletown, PA 17057, United States
(+717) 944-1300
info@phoenixcon.com