VAL-US-347/30/3+0-FM - Surge protection device

2910383

https://www.phoenixcontact.com/us/products/2910383

Please be informed that the data shown in this PDF document is generated from our online catalog. Please find the complete data in the user documentation. Our general terms of use for downloads are valid.



Surge protective device,UL Listed type 1 and IEC type 2, three channel with remote indicator contact for 347/600V and 400/690 V AC, 4-wire.

Your advantages

- With floating remote indication contact
- UL open terminal listed SPD
- Optical, mechanical status indication for the individual arresters
- Mechanical coding of all slots
- Plugs can be checked with CHECKMASTER
- Multi-channel type 2 protective devices
- Disconnect device on each individual plug

Commercial data

Item number	2910383
Packing unit	1 pc
Minimum order quantity	1 pc
Sales key	CL17
Product key	CL132U
GTIN	4055626445212
Weight per piece (including packing)	382.2 g
Weight per piece (excluding packing)	354.39 g
Customs tariff number	85363030
Country of origin	DE

Technical data

Product properties

Product type	Surge protection for NEMA power supply units
Product family	VALVETRAB US
IEC test classification	II
	T2
EN type	T2
IEC power supply system	TN-C
Type	DIN rail module, two-section, divisible
Distance between live and grounded parts	5 mm
Number of positions	3
Surge protection fault message	Optical, remote indicator contact
Number of ports	One

Insulation characteristics

Overvoltage category	III
Pollution degree	2

Electrical properties

Nominal frequency f_N	50 Hz (60 Hz)

Indicator/remote signaling

Connection name	Remote fault indicator contact
Switching function	Changeover contact
Operating voltage	5 V AC ... 250 V AC
	30 V DC
Operating current	5 mA AC ... 1.5 A AC
	1 A DC

Connection data

Connection method	Screw connection
Screw thread	M5
Tightening torque	3 Nm (1.5 mm² ... 16 mm²)
	4.5 Nm (25 mm² ... 35 mm²)
Stripping length	16 mm
Conductor cross-section flexible	1.5 mm² ... 25 mm²
Conductor cross-section rigid	1.5 mm² ... 35 mm²
Conductor cross-section AWG	15 ... 2
Connection method	Fork-type cable lug
Conductor cross-section flexible	1.5 mm² ... 16 mm²

Remote fault indicator contact

Connection method	Plug-in/screw connection via COMBICON
Screw thread	M2

Tightening torque	0.25 Nm
Stripping length	7 mm
Conductor cross-section flexible	0.14 mm² ... 1.5 mm²
Conductor cross-section rigid	0.14 mm² ... 1.5 mm²
Conductor cross-section AWG	28 ... 16

Dimensions

Dimensional drawing	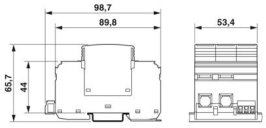
Width	53.4 mm
Height	98.7 mm
Depth	65.7 mm (incl. DIN rail 7.5 mm)
Horizontal pitch	3 HP

Material specifications

Color	black (RAL 9005)
Flammability rating according to UL 94	V-0
CTI value of material	600
Insulating material	PA 6.6/PBT
Material group	I
Housing material	PA 6.6
	PBT

Mechanical properties

Mechanical data

Open side panel	No

Protective circuit

Mode of protection	L-PEN
Direction of action	3L-GND
Nominal voltage U_N	400/690 V AC (TN-C)
	347/600 V AC (TN-C)
Nominal frequency f_N	50 Hz (60 Hz)
Maximum continuous operating voltage U_C	580 V AC
Standby power consumption P_C	≤ 150 mVA
Nominal discharge current I_n (8/20) µs	15 kA
Maximum discharge current I_{max} (8/20) µs	30 kA
Short-circuit current rating I_{SCCR}	25 kA
Voltage protection level U_p	≤ 2.5 kV
Residual voltage U_{res}	≤ 2.5 kV (at I_n)
	≤ 2.3 kV (at 10 kA)

	≤ 2.1 kV (at 5 kA)
	≤ 1.9 kV (at 3 kA)
TOV behavior at U_T	690 V AC (5 s / withstand mode)
	762 V AC (120 min / withstand mode)
Max. backup fuse with branch wiring	125 A (gG)

Environmental and real-life conditions

Ambient conditions

Degree of protection	IP20 (only when all terminal points are used)
Ambient temperature (operation)	-40 °C ... 80 °C
Ambient temperature (storage/transport)	-40 °C ... 80 °C
Altitude	≤ 2000 m (amsl)
Permissible humidity (operation)	5 % ... 95 %
Shock (operation)	25g (Half-sine / 11 ms / 3x ±X, ±Y, ±Z)
Vibration (operation)	5g (10 ... 500 Hz / 2.5 h / X, Y, Z)

Approvals

UL specifications

Maximum continuous operating voltage MCOV (L-L)	750 V AC
Maximum continuous operating voltage MCOV (L-G)	580 V AC
Short-circuit current rating (SCCR)	200 kA
Voltage protection rating VPR (L-L)	4000 V
Voltage protection rating VPR (L-G)	2000 V
UL type	type 1
Nominal discharge current I_n	20 kA
Maximum Surge Current per Phase	30 kA
Mode of protection	L-L
	L-G
Nominal voltage	347/600 V AC (3-phase Wye)
	400/690 V AC (3-phase Wye)
Power distribution system	Wye
Nominal frequency	50/60 Hz
SPD Type	1

UL indicator/remote signaling

Operating voltage	125 V AC
AC operating current	1 A AC

UL connection data

Tightening torque	30 lb_f-in.
Conductor cross-section AWG	14 ... 2

Standards and regulations

Air clearances and creepage distances

Standards/regulations	EN 60664-1 / EN 61643-11
Standards/specifications	IEC 61643-11
Note	2011
Standards/specifications	EN 61643-11
Note	2012

Mounting

Mounting type	DIN rail: 35 mm

Drawings

Dimensional drawing

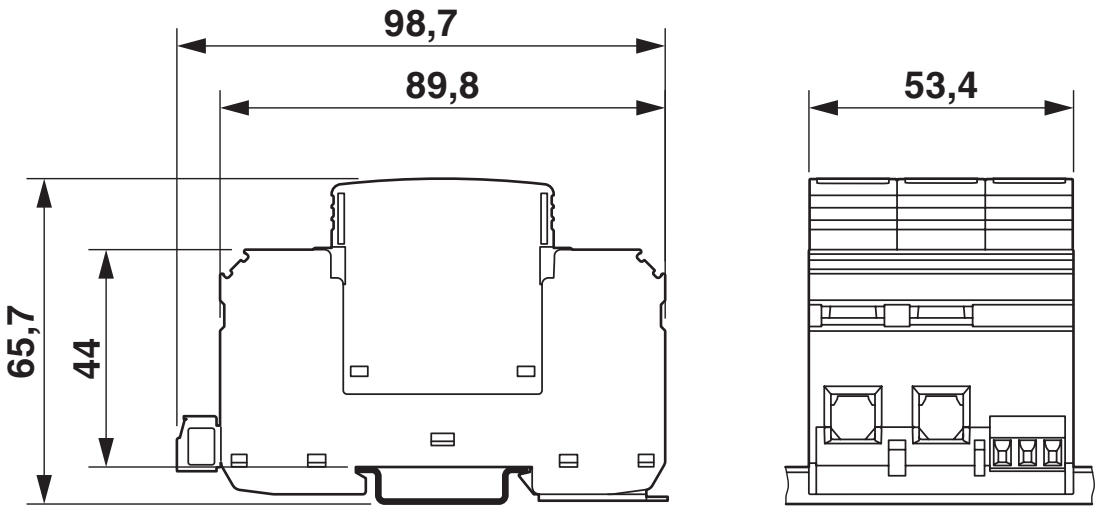

Circuit diagram

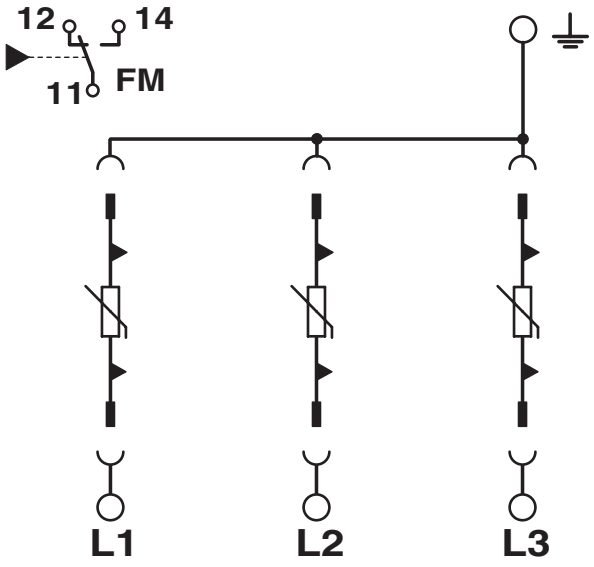

Approvals

To download certificates, visit the product detail page: https://www.phoenixcontact.com/us/products/2910383

UL Listed
Approval ID: FILE E 330181

cUL Listed
Approval ID: FILE E 330181

Classifications

ECLASS

ECLASS-13.0	27171202
ECLASS-15.0	27171202

ETIM

ETIM 10.0	EC000941

UNSPSC

UNSPSC 21.0	39121600

Environmental product compliance

EU RoHS

Fulfills EU RoHS substance requirements	Yes, No exemptions

China RoHS

Environment friendly use period (EFUP)	EFUP-E
	No hazardous substances above the limits

EU REACH SVHC

REACH candidate substance (CAS No.)	No substance above 0.1 wt%

Phoenix Contact 2026 © - all rights reserved
https://www.phoenixcontact.com

Phoenix Contact USA
586 Fulling Mill Road
Middletown, PA 17057, United States
(+717) 944-1300
info@phoenixcon.com