# VAL-US-347/30/1+0-FM - Surge protection device

2910381

https://www.phoenixcontact.com/us/products/2910381

Please be informed that the data shown in this PDF document is generated from our online catalog. Please find the complete data in the user documentation. Our general terms of use for downloads are valid.



Surge protective device,UL Listed type 1 and IEC type 2, single channel with remote indication contact for 347 V AC.

## Your advantages

- With floating remote indication contact
- Optical, mechanical status indication for the individual arresters
- Mechanical coding of all slots
- Type 2 consistent plug-in surge arresters

## Commercial data

| | |
|---|---|
| Item number | 2910381 |
| Packing unit | 1 pc |
| Minimum order quantity | 1 pc |
| Sales key | CL17 |
| Product key | CL132U |
| GTIN | 4055626445199 |
| Weight per piece (including packing) | 158 g |
| Weight per piece (excluding packing) | 133 g |
| Customs tariff number | 85363030 |
| Country of origin | US |

# Technical data

## Product properties

| | |
|---|---|
| Product type | Surge protection for NEMA power supply units |
| Product family | VALVETRAB US |
| IEC test classification | II |
| | T2 |
| EN type | T2 |
| IEC power supply system | TN-C |
| Type | DIN rail module, two-section, divisible |
| Distance between live and grounded parts | 5 mm |
| Number of positions | 1 |
| Surge protection fault message | Optical, remote indicator contact |
| Number of ports | One |

### Insulation characteristics

| | |
|---|---|
| Overvoltage category | III |
| Pollution degree | 2 |

## Electrical properties

| | |
|---|---|
| Nominal frequency $f_N$ | 50 Hz (60 Hz) |

### Indicator/remote signaling

| | |
|---|---|
| Connection name | Remote fault indicator contact |
| Switching function | Changeover contact |
| Operating voltage | 5 V AC ... 250 V AC |
| | 30 V DC |
| Operating current | 5 mA AC ... 1.5 A AC |
| | 1 A DC |

## Connection data

| | |
|---|---|
| Connection method | Screw connection |
| Screw thread | M5 |
| Tightening torque | 3 Nm (1.5 mm² ... 16 mm²) |
| | 4.5 Nm (25 mm² ... 35 mm²) |
| Stripping length | 16 mm |
| Conductor cross-section flexible | 1.5 mm² ... 25 mm² |
| Conductor cross-section rigid | 1.5 mm² ... 35 mm² |
| Conductor cross-section AWG | 15 ... 2 |
| Connection method | Fork-type cable lug |
| Conductor cross-section flexible | 1.5 mm² ... 16 mm² |

### Remote fault indicator contact

| | |
|---|---|
| Connection method | Plug-in/screw connection via COMBICON |
| Screw thread | M2 |

| | |
|---|---|
| Tightening torque | 0.25 Nm |
| Stripping length | 7 mm |
| Conductor cross-section flexible | 0.14 mm² ... 1.5 mm² |
| Conductor cross-section rigid | 0.14 mm² ... 1.5 mm² |
| Conductor cross-section AWG | 28 ... 16 |

## Dimensions

| | |
|---|---|
| Dimensional drawing | 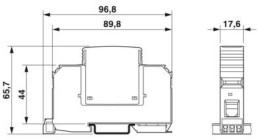 |
| Width | 17.6 mm |
| Height | 96.8 mm |
| Depth | 65.7 mm (incl. DIN rail 7.5 mm) |
| Horizontal pitch | 1 HP |

## Material specifications

| | |
|---|---|
| Color | black (RAL 9005) |
| Flammability rating according to UL 94 | V-0 |
| CTI value of material | 600 |
| Insulating material | PA 6.6/PBT |
| Material group | I |
| Housing material | PA 6.6 |
| | PBT |

## Mechanical properties

Mechanical data

| | |
|---|---|
| Open side panel | No |

## Protective circuit

| | |
|---|---|
| Mode of protection | L-PEN |
| Direction of action | 1L-GND |
| Nominal voltage $U_N$ | 400 V AC (TN-C) |
| | 347 V AC (TN-C) |
| Nominal frequency $f_N$ | 50 Hz (60 Hz) |
| Maximum continuous operating voltage $U_C$ | 580 V AC |
| Standby power consumption $P_C$ | ≤ 150 mVA |
| Nominal discharge current $I_n$ (8/20) µs | 15 kA |
| Maximum discharge current $I_{max}$ (8/20) µs | 30 kA |
| Short-circuit current rating $I_{SCCR}$ | 25 kA |
| Voltage protection level $U_p$ | ≤ 2.5 kV |
| Residual voltage $U_{res}$ | ≤ 2.5 kV (at $I_n$) |
| | ≤ 2.3 kV (at 10 kA) |

| | |
|---|---|
| | ≤ 2.1 kV (at 5 kA) |
| | ≤ 1.9 kV (at 3 kA) |
| TOV behavior at $U_T$ | 690 V AC (5 s / withstand mode) |
| | 762 V AC (120 min / withstand mode) |
| Max. backup fuse with branch wiring | 125 A (gG) |

## Environmental and real-life conditions

Ambient conditions

| | |
|---|---|
| Degree of protection | IP20 (only when all terminal points are used) |
| Ambient temperature (operation) | -40 °C ... 80 °C |
| Ambient temperature (storage/transport) | -40 °C ... 80 °C |
| Altitude | ≤ 2000 m (amsl) |
| Permissible humidity (operation) | 5 % ... 95 % |
| Shock (operation) | 25g (Half-sine / 11 ms / 3x ±X, ±Y, ±Z) |
| Vibration (operation) | 5g (10 ... 500 Hz / 2.5 h / X, Y, Z) |

## Approvals

UL specifications

| | |
|---|---|
| Maximum continuous operating voltage MCOV | 580 V AC |
| Short-circuit current rating (SCCR) | 200 kA |
| Voltage protection rating VPR | 2000 V |
| UL type | type 1 |
| Nominal discharge current $I_n$ | 20 kA |
| Maximum Surge Current per Phase | 30 kA |
| Mode of protection | L-N |
| | L-G |
| Nominal voltage | 347/600 V AC (Single-phase) |
| | 400/690 V AC |
| Power distribution system | Single phase |
| Nominal frequency | 50/60 Hz |
| SPD Type | 1 |

UL indicator/remote signaling

| | |
|---|---|
| Operating voltage | 125 V AC |
| AC operating current | 1 A AC |

UL connection data

| | |
|---|---|
| Tightening torque | 30 $lb_f$-in. |
| Conductor cross-section AWG | 14 ... 2 |

## Standards and regulations

Air clearances and creepage distances

| | |
|---|---|
| Standards/regulations | EN 60664-1 / EN 61643-11 |
| Standards/specifications | IEC 61643-11 |

| | |
|---|---|
| Note | 2011 |
| Standards/specifications | EN 61643-11 |
| Note | 2012 |

## Mounting

| | |
|---|---|
| Mounting type | DIN rail: 35 mm |

## Drawings

Dimensional drawing

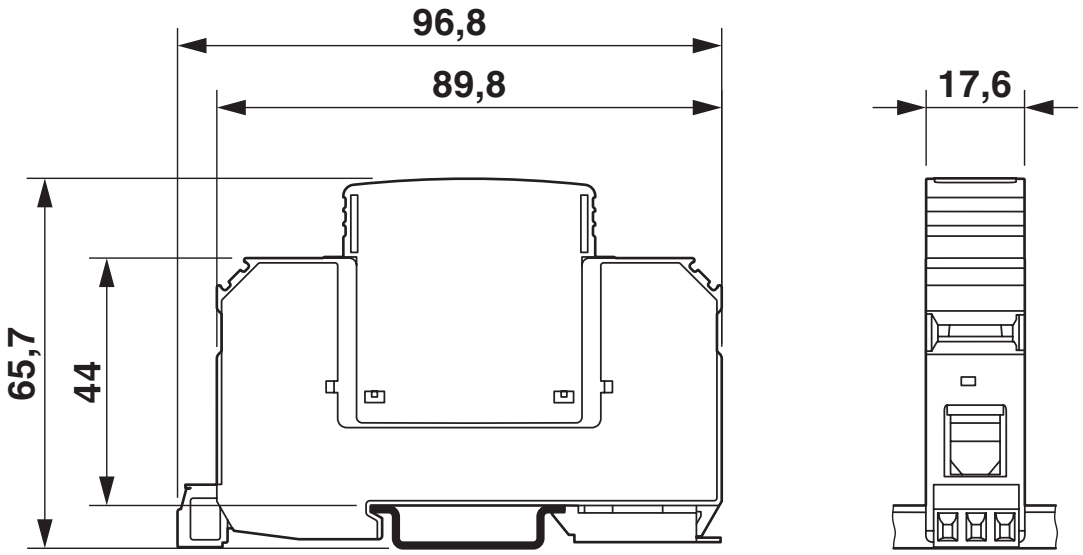


Circuit diagram

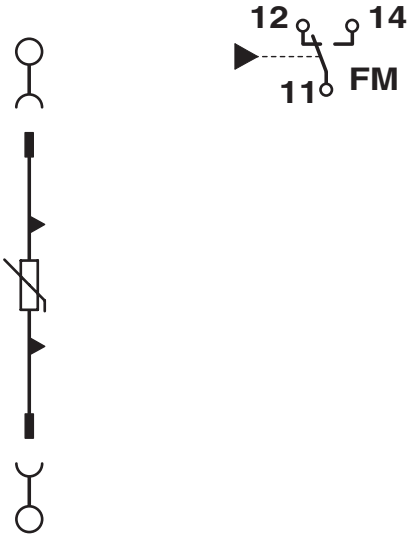

## Approvals

To download certificates, visit the product detail page: https://www.phoenixcontact.com/us/products/2910381

**UL Listed**
Approval ID: FILE E 330181

**cUL Listed**
Approval ID: FILE E 330181

## Classifications

### ECLASS

| | |
|---|---|
| ECLASS-13.0 | 27171202 |
| ECLASS-15.0 | 27171202 |

### ETIM

| | |
|---|---|
| ETIM 10.0 | EC000941 |

### UNSPSC

| | |
|---|---|
| UNSPSC 21.0 | 39121600 |

## Environmental product compliance

EU RoHS

| | |
|---|---|
| Fulfills EU RoHS substance requirements | Yes, No exemptions |

China RoHS

| | |
|---|---|
| Environment friendly use period (EFUP) | EFUP-E |
| | No hazardous substances above the limits |

EU REACH SVHC

| | |
|---|---|
| REACH candidate substance (CAS No.) | No substance above 0.1 wt% |


Phoenix Contact 2026 © - all rights reserved
https://www.phoenixcontact.com



Phoenix Contact USA
586 Fulling Mill Road
Middletown, PA 17057, United States
(+717) 944-1300
info@phoenixcon.com