CAB-MSTB32/2XMC9/22/35,0M/C3/S - Interface cable

2909901

https://www.phoenixcontact.com/us/products/2909901

Please be informed that the data shown in this PDF document is generated from our online catalog. Please find the complete data in the user documentation. Our general terms of use for downloads are valid.

VIP 16-channel cable for use with Honeywell C300 universal I/O, 22 AWG, 35.0 m long



Your advantages

- Splitter cable for connecting two 8-channel VIP base modules to a Honeywell® 16-channel IOTA board assembly
- #22 AWG halogen-free cable
- Locking flanges for securing cables to the modules and IOTA

Commercial data

Item number	2909901
Packing unit	1 pc
Minimum order quantity	1 pc
Note	Made to order (non-returnable)
Sales key	C480
Product key	DK115B
GTIN	4055626541952
Weight per piece (including packing)	44.5 g
Weight per piece (excluding packing)	27.58 g
Customs tariff number	85444290
Country of origin	MX

Technical data

Product properties

Product type	System cable
Product family	VIP I/O-Marshalling

Environmental and real-life conditions

Ambient conditions

Ambient temperature (operation)	-40 °C ... 90 °C (static)
Ambient temperature (storage/transport)	-40 °C ... 90 °C

Electrical properties

Operating voltage (AC/DC)	≤ 30 V AC/DC
Current (Per path)	≤ 2 A

Cable/line

Cable length	35 m
Number of positions	16
Shielded	yes
Conductor type	Assembled shielded round cable
Conductor structure signal line	7x
AWG signal line	22
Conductor cross-section	16x 0.36 mm²
External cable diameter	8.50 mm
Conductor material	Tin-plated Cu litz wires
Halogen-free	yes
Flame resistance	IEC 60332-1
Cable type	Splitting cable for two modules

Connection data

Field level

Connection method	pluggable
Number of connections	2
Number of positions	18
Pitch	3.81 mm

Controller level

Connection method	pluggable
Number of connections	1
Number of positions	32
Pitch	5.08 mm

Drawings

Circuit diagram

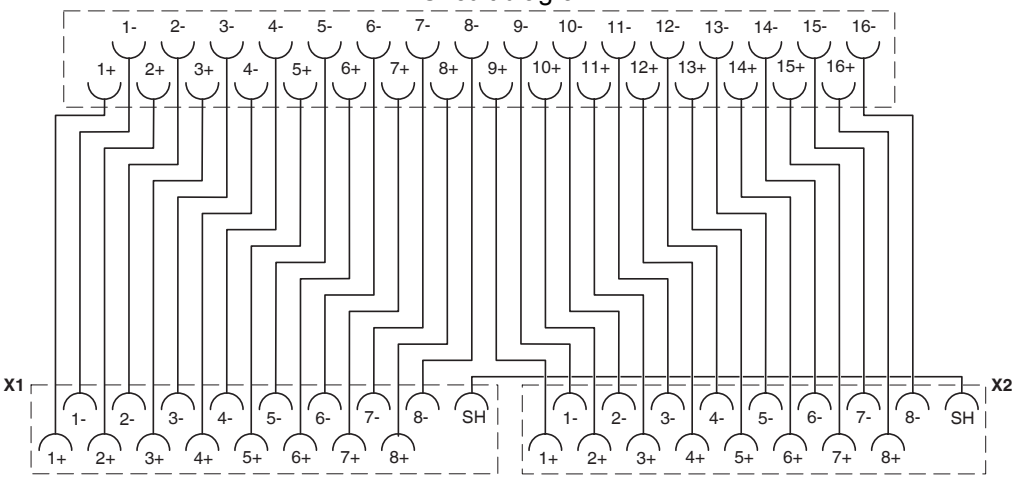

Classifications

ECLASS

ECLASS-13.0	27242220

ETIM

ETIM 9.0	EC000237

UNSPSC

UNSPSC 21.0	26121600

Environmental product compliance

EU RoHS

Fulfills EU RoHS substance requirements	Yes, No exemptions

EU REACH SVHC

REACH candidate substance (CAS No.)	No substance above 0.1 wt%

Phoenix Contact 2026 © - all rights reserved
https://www.phoenixcontact.com

Phoenix Contact USA
586 Fulling Mill Road
Middletown, PA 17057, United States
(+717) 944-1300
info@phoenixcon.com