PLC-RSC-120UC/21-21/EX - Relay module

2909511

https://www.phoenixcontact.com/us/products/2909511

Please be informed that the data shown in this PDF document is generated from our online catalog. Please find the complete data in the user documentation. Our general terms of use for downloads are valid.



PLC-INTERFACE, consisting of DIN-rail-mountable basic terminal block in 14 mm with screw connection and plug-in relay with power contact, 2 changeover contacts, 120 V AC/110 V DC input voltage. Approved according to ATEX/IECEx (Zone 2) and Ex Zone Class I, Div. 2.

Commercial data

Item number	2909511
Packing unit	10 pc
Minimum order quantity	10 pc
Sales key	C461
Product key	DK623K
GTIN	4055626363141
Weight per piece (including packing)	77.2 g
Weight per piece (excluding packing)	70.63 g
Customs tariff number	85364900
Country of origin	DE

Technical data

Notes

Utilization restriction

EMC note	EMC: class A product, see manufacturer's declaration in the download area

Product properties

Product type	Relay Module
Product family	PLC-INTERFACE
Application	Class I, Division 2
	potentially explosive areas
Operating mode	100% operating factor
Mechanical service life	3x 10^7 cycles

Insulation characteristics: Standards/regulations

Insulation	Safe isolation, reinforced insulation
Overvoltage category	III
Pollution degree	3

Data management status

Date of last data management	19.11.2026

Electrical properties

Maximum power dissipation for nominal condition	0.54 W
Test voltage (Winding/contact)	4 kV AC (50 Hz, 1 min., winding/contact)
Test voltage (Changeover contact/changeover contact)	2.5 kV AC (50 Hz, 1 min., changeover contact/changeover contact)

Standards/regulations

Rated insulation voltage	250 V AC
Rated surge voltage	6 kV

Input data

Coil side

Nominal input voltage U_N	120 V AC
	110 V DC
Input voltage range	102 V AC ... 168 V AC (20 °C)
	85.8 V DC ... 154 V DC (20 °C)
Nominal voltage (plugged-in electromechanical relay)	110 V DC
Drive and function	monostable
Drive (polarity)	polarized
Typical input current at U_N	4.5 mA (U_N = 120 V AC)
	4.2 mA (U_N = 110 V DC)

Typical response time	7 ms
Typical release time	10 ms
Protective circuit	Bridge rectifier; Bridge rectifier
Operating voltage display	Yellow LED

Output data

Switching

Contact switching type	2 changeover contacts
Type of switch contact	Single contact
Contact material	AgNi
Maximum switching voltage	250 V AC/DC (The divider plate PLC-ATP should be installed for voltages larger than 250 V (L1, L2, L3) between identical terminal blocks in adjacent modules. Potential bridging is then carried out with FBST 8-PLC... or ...FBST 500...)
Minimum switching voltage	5 V AC/DC (10 mA)
Limiting continuous current	2x 6 A (Derating)
Maximum inrush current	15 A (300 ms)
Min. switching current	10 mA (5 V)
Interrupting rating (ohmic load) max.	140 W (24 V DC)
	85 W (48 V DC)
	60 W (60 V DC)
	44 W (110 V DC)
	60 W (220 V DC)
	1500 VA (250 V AC)
Switching capacity	2 A (24 V (DC13))
	0.2 A (250 V (DC13))
	3 A (24 V (AC15))
	3 A (120 V (AC15))
	3 A (250 V (AC15))

Connection data

Connection method	Screw connection
Stripping length	8 mm
Screw thread	M3
Conductor cross-section rigid	0.14 mm² ... 2.5 mm²
Conductor cross-section flexible	0.14 mm² ... 2.5 mm²
	0.2 mm² ... 2.5 mm² (Single ferrule)
	2x 0.5 mm² ... 1.5 mm² (TWIN ferrule)
Conductor cross-section AWG	26 ... 14
Tightening torque	0.6 Nm ... 0.8 Nm

Dimensions

Item dimensions

Width	14 mm

Height	80 mm
Depth	94 mm

Material specifications

Color	gray (RAL 7042)
Flammability rating according to UL 94 (Housing)	V0 (Housing)

Environmental and real-life conditions

Ambient conditions

Degree of protection (Relay)	RT III (Relay)
Degree of protection (Relay base)	IP20 (Relay base)
Ambient temperature (operation)	-40 °C ... 60 °C
Ambient temperature (storage/transport)	-40 °C ... 85 °C
Altitude	≤ 2000 m

Approvals

CE

Certificate	CE-compliant

ATEX

Identification	⟨Ex⟩ II 3G Ex ec nC IIC T4 Gc
Certificate	IBExU16ATEXB015 X

IECEx

Identification	Ex ec nC IIC T4 Gc
Certificate	IECEx IBE 16.0029X

CCC / China-Ex

Identification	Ex ec nC IIC T4 Gc
Certificate	2021122304114118

INMETRO

Identification	Ex ec nC IIC T4 Gc
Certificate	DNV 25.0067 X

UL, USA/Canada

Identification	Class I, Zone 2, AEx ec nC IIC Gc T4
	Class I, Zone 2, Ex ec nC IIC Gc T4 X

Shipbuilding approval

Certificate	TAE0000196

Corrosive gas test

Identification	ISA-S71.04. G3 Harsh Group
	EN 60068-2-60

Shipbuilding data

Temperature	D
Humidity	A
Vibration	B/C
EMC	B
Enclosure	Required protection according to the Rules shall be provided upon installation on board

EMC data

Electromagnetic compatibility	Conformance with EMC directive
Low Voltage Directive	Conformance with Low Voltage Directive

Standards and regulations

Standards/regulations

Standards/regulations	IEC 60664
	IEC 60947-5-1
	IEC/EN 60079-0
	IEC/EN 60079-7
	IEC/EN 60079-15

GB Standard

Standards/regulations	GB/T 3836.1
	GB/T 3836.3
	GB/T 3836.8

Mounting

Mounting type	DIN rail mounting
Assembly note	in rows with zero spacing
Mounting position	any

Drawings

Diagram

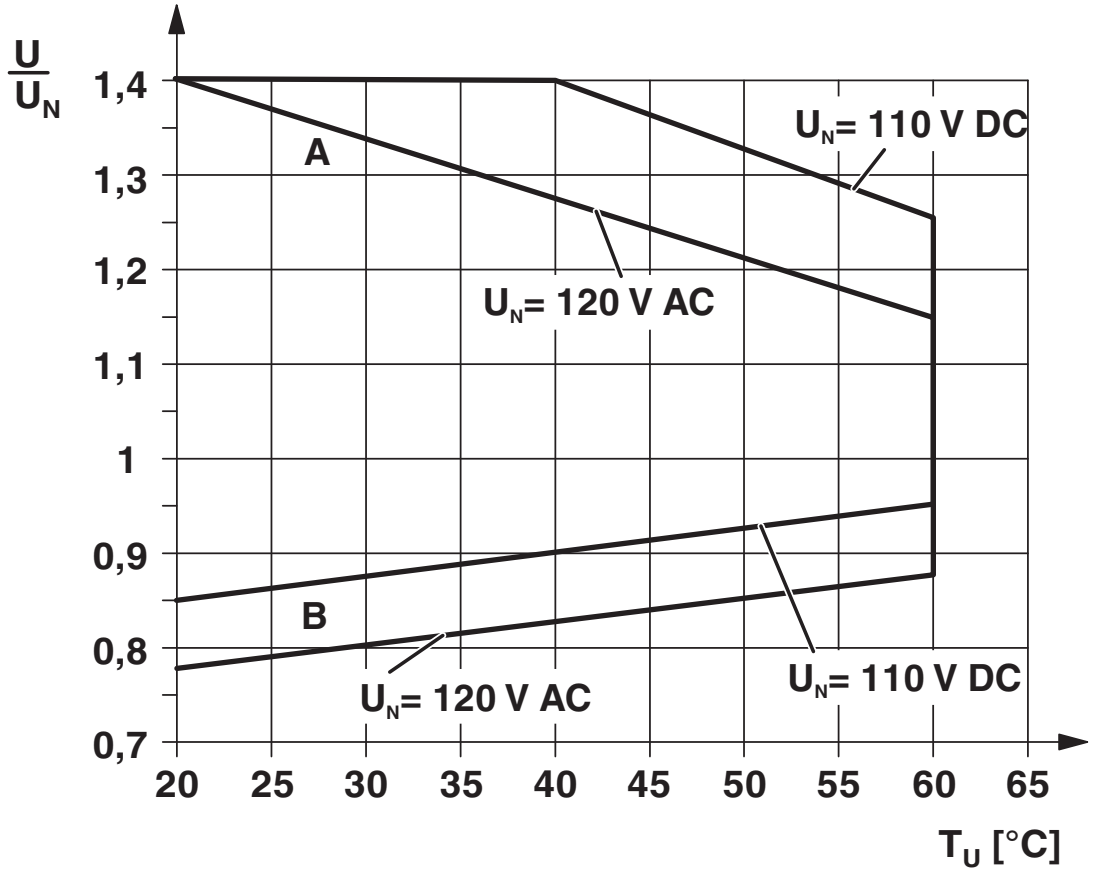

Curve A

Maximum permissible continuous voltage U_{max} with limiting continuous current on the contact side (see relevant technical data)

Curve B

Minimum permissible operate voltage U_{op} after pre-excitation (see relevant technical data)

Diagram

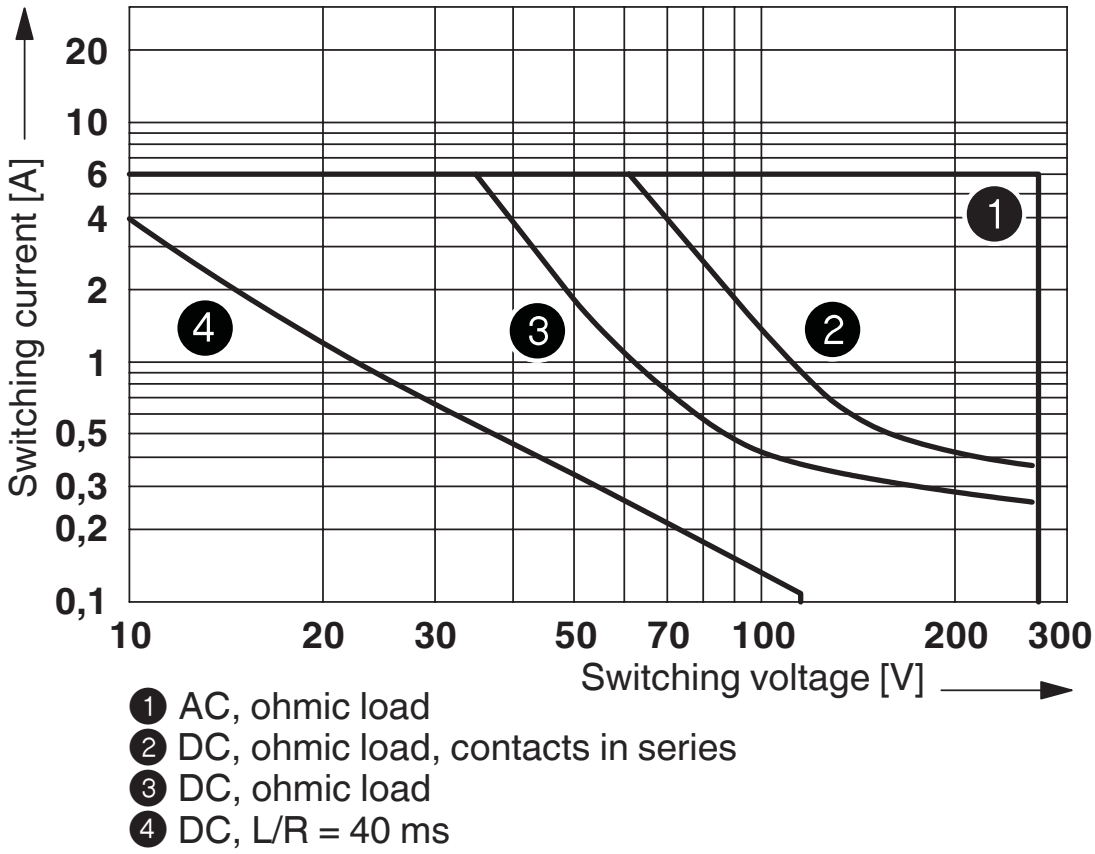

1 AC, ohmic load
2 DC, ohmic load, contacts in series
3 DC, ohmic load
4 DC, L/R = 40 ms

Interrupting rating

Diagram

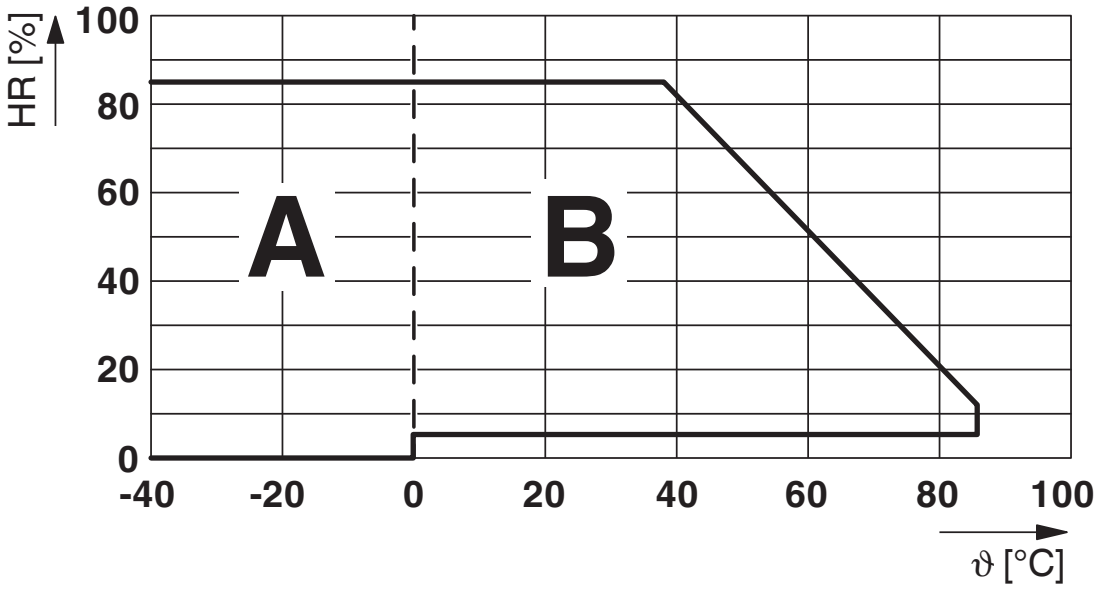

Permissible humidity for operation and storage.
The maximum permissible ambient temperature as specified in the data sheet must be observed.

Area A: Ice buildup at ambient temperatures ≤ 0°C must be prevented
Area B: Condensation at ambient temperatures > 0°C must be prevented

On 30 full days that are naturally distributed across an entire year, a humidity level of 95% is permissible at an ambient temperature ≤ 25°C.

Circuit diagram

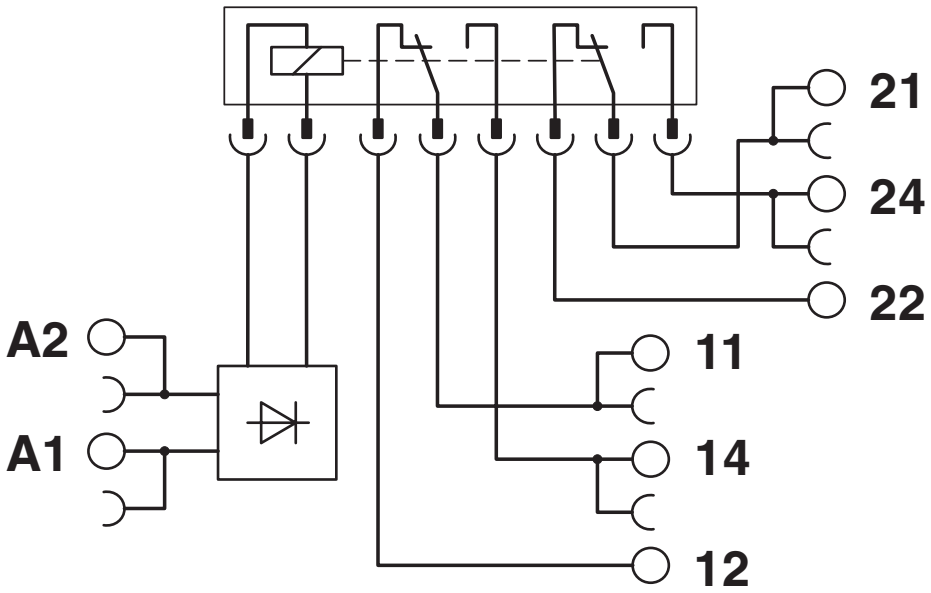

Approvals

To download certificates, visit the product detail page: https://www.phoenixcontact.com/us/products/2909511

cULus Listed
Approval ID: E140324

cULus Listed
Approval ID: E140324

EAC Ex
Approval ID: RU C-DE.AB72.B.02328

IECEx
Approval ID: IECEx IBE 16.0029X

ATEX
Approval ID: 16ATEXB015X

cULus Listed
Approval ID: E199827

CCC
Approval ID: 2021122304114118

IECEx
Approval ID: IECEx IBE 16.0029X

ATEX
Approval ID: IBExU16ATEXB015X

Classifications

ECLASS

ECLASS-13.0	27371601
ECLASS-15.0	27371601

ETIM

ETIM 10.0	EC001437

UNSPSC

UNSPSC 21.0	39122300

Environmental product compliance

EU RoHS

Fulfills EU RoHS substance requirements	Yes
Exemption	7(a), 7(c)-I

China RoHS

Environment friendly use period (EFUP)	EFUP-50
	An article-related China RoHS declaration table can be found in the download area for the respective article under "Manufacturer declaration". For all articles with EFUP-E, no China RoHS declaration table issued and required.

EU REACH SVHC

REACH candidate substance (CAS No.)	Hexahydromethylphthalic anhydride(CAS: n/a)
	Lead(CAS: 7439-92-1)
SCIP	7f4b34d1-512a-4fa1-9c47-6e67de26e576

EF3.1 Climate Change

CO2e kg	0.916 kg CO2e

Phoenix Contact 2026 © - all rights reserved
https://www.phoenixcontact.com

Phoenix Contact USA
586 Fulling Mill Road
Middletown, PA 17057, United States
(+717) 944-1300
info@phoenixcon.com