QUINT4-BUFFER/24DC/20 - Buffer module

2907913

https://www.phoenixcontact.com/us/products/2907913

Please be informed that the data shown in this PDF document is generated from our online catalog. Please find the complete data in the user documentation. Our general terms of use for downloads are valid.



QUINT buffer module with maintenance-free capacitor-based energy storage for DIN rail mounting, input: 24 V DC, output: 24 V DC/20 A, including mounted UTA 107 universal DIN rail adapter.

Product description

Bridge failures lasting several seconds with the buffer modules from the QUINT range for DIN rails. The QUINT BUFFER combines an electronic switch-over unit and maintenance-free, capacitor-based energy storage in the same housing.

Your advantages

- Space savings, thanks to the compact design
- Maintenance-free due to electrolytic capacitors
- Thanks to soft start, can also be used with power supplies in the low power range

ELEKTROGERÄTE RÜCKNAHME

Commercial data

Item number	2907913
Packing unit	1 pc
Minimum order quantity	1 pc
Sales key	CM21
Product key	CMUIE3
GTIN	4055626309040
Weight per piece (including packing)	1,060 g
Weight per piece (excluding packing)	760.55 g
Customs tariff number	85322200
Country of origin	MX

Technical data

Input data

Input voltage range	22.5 V DC ... 30 V DC
Fixed backup threshold	< 22 V DC
Voltage type of supply voltage	DC
Current consumption I_{max} (U_N, I_{OUT} = $I_{Stat.Boost}$, I_{Charge} = max)	26 A (max.)
Current consumption $I_{No-Load}$(U_N, I_{OUT} = 0, I_{charge} = 0)	0.2 A (No-load)
Current consumption I_{charge} (U_N, I_{OUT} = 0, I_{charge} = max)	0.6 A (charging process)
Buffer time	0.2 s (20 A)
	2 s (2 A)

Output data

Efficiency	> 98 % (with charged energy storage device)
Connection in parallel	no
Connection in series	no

Mains operation

Output voltage	24 V DC (depending on the input voltage)
Output current I_N	20 A
Power loss nominal load max.	< 6 W

Buffer mode

Output voltage	typ. 22 V DC
Output current I_N	20 A (depending on output current)
Static Boost ($I_{Stat.Boost}$)	25 A
Power loss nominal load max.	< 6 W

Energy storage

Input

Nominal capacity	1 mAh

General

IQ-Technology	no
Storage medium	Electrolytic capacitor

Signaling

Signal state UIN OK

Connection labeling	3.1, 3.2
Switching output	Electronic relays (OptoMOS)
State (configurable)	U_{In} OK
Output voltage	30 V DC
Output can be loaded	200 mA
LED status indicator	green (U_{In} OK)

Signal threshold	Input voltage in the valid range

Signal state Ready

Connection labeling	3.3
Switching output	Transistor output, active
State (configurable)	Ready
State condition (configurable)	State of charge = 100% or buffer mode
Output voltage	24 V (U_N - 2 V (typical))
Output can be loaded	20 mA
LED status indicator	green (Ready)

Signal ground SGnd

Connection labeling	3.4
Function	Signal ground
Reference potential	3.3 Ready

Electrical properties

Insulation voltage input, output / housing	500 V

Product properties

Product type	Buffer module
Product family	QUINT BUFFER
MTBF (IEC 61709, SN 29500)	2497464 h (40 °C)

Insulation characteristics

Protection class	Special application (SELV input voltage, hazardous voltages are generated in the device).
Overvoltage category	I
Degree of pollution	2

Life expectancy (electrolytic capacitors)

Current	20 A
Temperature	30 °C
Time	288935 h

Life expectancy (electrolytic capacitors)

Current	20 A
Temperature	40 °C
Time	144468 h

Life expectancy (electrolytic capacitors)

Current	20 A
Temperature	45 °C
Time	102154 h

Life expectancy (electrolytic capacitors)

Current	20 A
Temperature	50 °C

Time	72234 h

Life expectancy (electrolytic capacitors)

Current	20 A
Temperature	60 °C
Time	36117 h

Dimensions

Item dimensions

Width	56 mm
Height	130 mm
Depth	125 mm

Installation dimensions

Installation distance right/left	0 mm / 0 mm
Installation distance top/bottom	50 mm / 50 mm

Mounting

Assembly note	alignable: horizontally 0 mm, vertically 50 mm
Mounting position	horizontal DIN rail NS 35, EN 60715

Material specifications

Housing material	Metal

Environmental and real-life conditions

Ambient conditions

Degree of protection	IP20
Ambient temperature (operation)	-25 °C ... 70 °C (> 40 °C Derating: 1 %/K / > 60 °C Derating: 2.5 %/K)
Ambient temperature (storage/transport)	-40 °C ... 70 °C
Ambient temperature (start-up type tested)	-40 °C
Maximum altitude	≤ 4000 m
Climatic class	3K3 (in acc. with EN 60721)
Max. permissible relative humidity (operation)	≤ 95 %

Standards and regulations

Electrical safety

Standard designation	Electrical safety
Standards/specifications	IEC 60950-1/VDE 0805 (SELV)

Approvals

UL

Identification	UL Listed UL 508

UL

Identification	UL/C-UL Recognized UL 60950-1

UL

Identification	UL ANSI/ISA-12.12.01 Class I, Division 2, Groups A, B, C, D (Hazardous Location)

EMC data

Electromagnetic compatibility	Conformance with EMC Directive 2014/30/EU
EMC requirements for noise emission	EN 61000-6-3
	EN 61000-6-4
EMC requirements for noise immunity	EN 61000-6-1
	EN 61000-6-2
Noise immunity	Immunity in accordance with EN 61000-6-2 (industrial)

Noise emission

Standards/regulations	EN 55016
	EN 61000-6-3

Electrostatic discharge

Standards/regulations	EN 61000-4-2

Electrostatic discharge

Contact discharge	6 kV (Test Level 3)
Discharge in air	8 kV (Test Level 3)
Comments	Criterion A

Electromagnetic HF field

Standards/regulations	EN 61000-4-3

Electromagnetic HF field

Frequency range	80 MHz ... 6 GHz
Test field strength	10 V/m
Comments	Criterion A

Fast transients (burst)

Standards/regulations	EN 61000-4-4

Fast transients (burst)

Input	2 kV (Test Level 3 - asymmetrical)
Output	2 kV (Test Level 3 - asymmetrical)
Signal	2 kV (Test Level 3 - asymmetrical)
Comments	Criterion A

Surge voltage load (surge)

Input	1 kV (Test Level 2 - symmetrical)
	2 kV (Test Level 3 - asymmetrical)
Output	1 kV (Test Level 2 - symmetrical)

	2 kV (Test Level 3 - asymmetrical)
Signal	1 kV (Test Level 2 - asymmetrical)
Comments	Criterion A

Conducted interference

Standards/regulations	EN 61000-4-6

Conducted interference

Frequency range	0.15 MHz ... 80 MHz
Comments	Criterion A
Voltage	10 V

Criteria

Criterion A	Normal operating behavior within the specified limits.
Criterion B	Temporary impairment to operational behavior that is corrected by the device itself.

Drawings

Block diagram

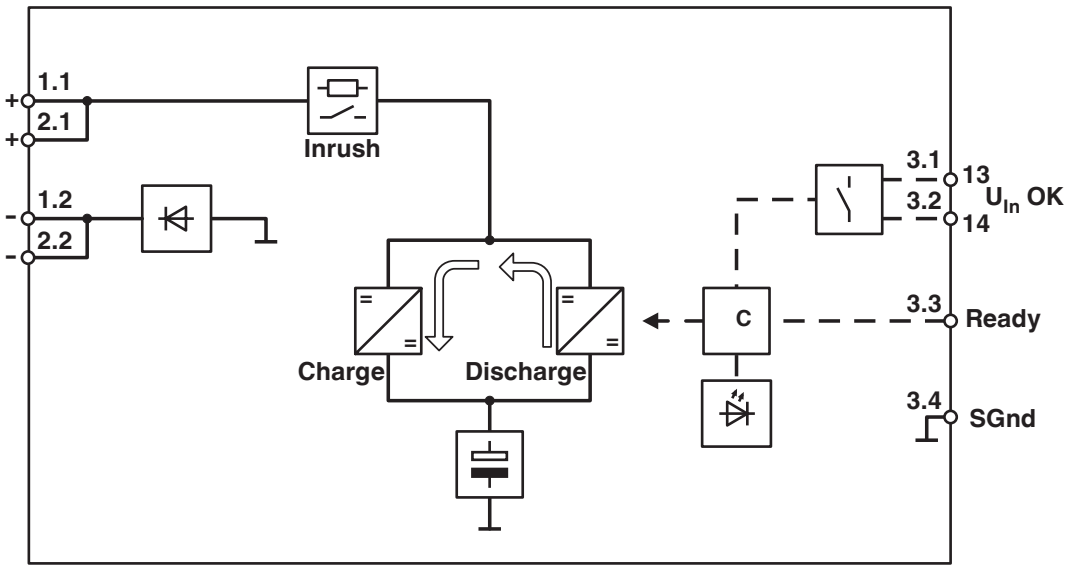

Graphic

Load Current	Buffertime Seconds 0.1	0.3	0.4	0.5	1	1.5	6	7	9	12	14	16	18	19	25	30
0.1 A																
0.25 A																
0.50 A																
0.75 A																
1 A																
5 A																
10 A																
20 A																
30 A																
40 A																

The data is based on an ambient temperature of +25 °C at the start of use.

2907913 QUINT4-BUFFER/24DC/20 **2908283** QUINT4-BUFFER/24DC/40

QUINT BUFFER buffer times

Approvals

To download certificates, visit the product detail page: https://www.phoenixcontact.com/us/products/2907913

cUL Recognized
Approval ID: E211944

UL Recognized
Approval ID: E211944

EAC
Approval ID: RU S-DE.BL08.W.00764

UL Listed
Approval ID: E123528

cUL Listed
Approval ID: E123528

IECEE CB Scheme
Approval ID: DE/PTZ/0063

cUL Listed
Approval ID: E199827

UL Listed
Approval ID: E199827

Classifications

ECLASS

ECLASS-13.0	27040692
ECLASS-15.0	27040692

ETIM

ETIM 10.0	EC002850

UNSPSC

UNSPSC 21.0	26111700

Environmental product compliance

EU RoHS

Fulfills EU RoHS substance requirements	Yes
Exemption	6(c), 7(a), 7(c)-I

China RoHS

Environment friendly use period (EFUP)	EFUP-25
	An article-related China RoHS declaration table can be found in the download area for the respective article under "Manufacturer declaration". For all articles with EFUP-E, no China RoHS declaration table issued and required.

EU REACH SVHC

REACH candidate substance (CAS No.)	Diboron trioxide(CAS: 1303-86-2)
	Lead monoxide (lead oxide)(CAS: 1317-36-8)
	Lead(CAS: 7439-92-1)
SCIP	bf780566-3baa-40df-a168-e05bbde8eda2

Phoenix Contact 2026 © - all rights reserved
https://www.phoenixcontact.com

Phoenix Contact USA
586 Fulling Mill Road
Middletown, PA 17057, United States
(+717) 944-1300
info@phoenixcon.com