VAL-SEC-T2-48DC-P - Type 2 surge protection plug

2907877

https://www.phoenixcontact.com/us/products/2907877

Please be informed that the data shown in this PDF document is generated from our online catalog. Please find the complete data in the user documentation. Our general terms of use for downloads are valid.



Replacement plug for surge protective devices from the VALVETRAB SEC product range for DC power sources.

Commercial data

Item number	2907877
Packing unit	1 pc
Minimum order quantity	1 pc
Note	Made to order (non-returnable)
Sales key	CL01
Product key	CL1353
GTIN	4055626245027
Weight per piece (including packing)	52.3 g
Weight per piece (excluding packing)	49.6 g
Customs tariff number	85363090
Country of origin	DE

Technical data

Product properties

Product type	Replacement plug
Product family	SEC Family
IEC test classification	II
	T2
EN type	T2
IEC power supply system	DC
Type	Male
Number of positions	1
Surge protection fault message	optical

Insulation characteristics

Overvoltage category	III
Pollution degree	2

Electrical properties

Nominal voltage U_N	48 V DC ... 60 V DC

Connection data

Connection method	pluggable

Dimensions

Dimensional drawing	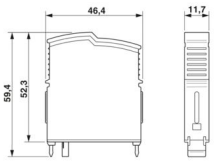
Width	11.7 mm
Height	46.4 mm
Depth	59.4 mm
Horizontal pitch	0.6 HP

Material specifications

Color	light gray (RAL 7035)
Flammability rating according to UL 94	V-0
CTI value of material	600
Insulating material	PA6.6-FR 20% GF
	PBT-FR
Material group	I
Housing material	PA 6.6-FR 20 % GF
	PBT-FR

Protective circuit

Mode of protection	(DC+) - (DC-)
	(DC+) - PE
	(DC-) - PE
Direction of action	(DC+/DC-) - PE
Nominal voltage U_N	60 V AC (TN)
	48 V DC ... 60 V DC
Maximum continuous operating voltage U_C	75 V DC
	75 V AC
Protective conductor current I_{PE}	≤ 50 µA DC
Nominal discharge current I_n (8/20) µs	20 kA
Maximum discharge current I_{max} (8/20) µs	40 kA
Impulse discharge current (10/350) µs, charge	2 As
Impulse discharge current (10/350) µs, specific energy	4 kJ/Ω
Impulse discharge current (10/350) µs, peak value I_{imp}	4 kA
Short-circuit current rating I_{SCCR}	0.2 kA DC (without backup fuse)
	6 kA DC (for 20 A gG/B backup fuse)
	10 kA AC (C63 A miniature circuit breaker)
	25 kA AC (for a backup fuse of up to 315 A gG)
	50 kA AC (for a backup fuse of up to 200 A gG)
Voltage protection level U_p	≤ 0.5 kV
Residual voltage U_{res}	≤ 0.5 kV (at I_n)
	≤ 0.4 kV (at 10 kA)
	≤ 0.35 kV (at 5 kA)
	≤ 0.3 kV (at 2 kA)
TOV behavior at U_T	87 V DC (5 s / withstand mode)
	100 V AC (5 s / withstand mode)
Response time t_A	≤ 25 ns
Max. backup fuse with V-type through wiring	20 A DC (gG / B at I_{SCCR} > 200 A)
Max. backup fuse with branch wiring	20 A DC (gG / B at I_{SCCR} > 200 A)
	315 A AC

Environmental and real-life conditions

Ambient conditions

Degree of protection	IP20
Ambient temperature (operation)	-40 °C ... 80 °C
Ambient temperature (storage/transport)	-40 °C ... 80 °C
Altitude	≤ 6000 m (amsl)
Permissible humidity (operation)	5 % ... 95 %
Shock (operation)	30g (Half-sine / 11 ms / 3x ±X, ±Y, ±Z)
Vibration (operation)	5g (10 ... 500 Hz / 2.5 h / X, Y, Z)

Approvals

UL specifications

Maximum continuous operating voltage MCOV	75 V DC
Short-circuit current rating (SCCR)	50 kA
Voltage protection rating VPR	400 V
Nominal discharge current I_n	20 kA
Mode of protection	(DC+) - G
	(DC-) - G
Nominal voltage	48 V DC
Power distribution system	DC
SPD Type	1CA

Standards and regulations

Standards/specifications	IEC 61643-11
Note	2011

EN 61643-11

Standards/specifications	EN 61643-11
Note	2012

Mounting

Mounting type	on base element

Drawings

Dimensional drawing

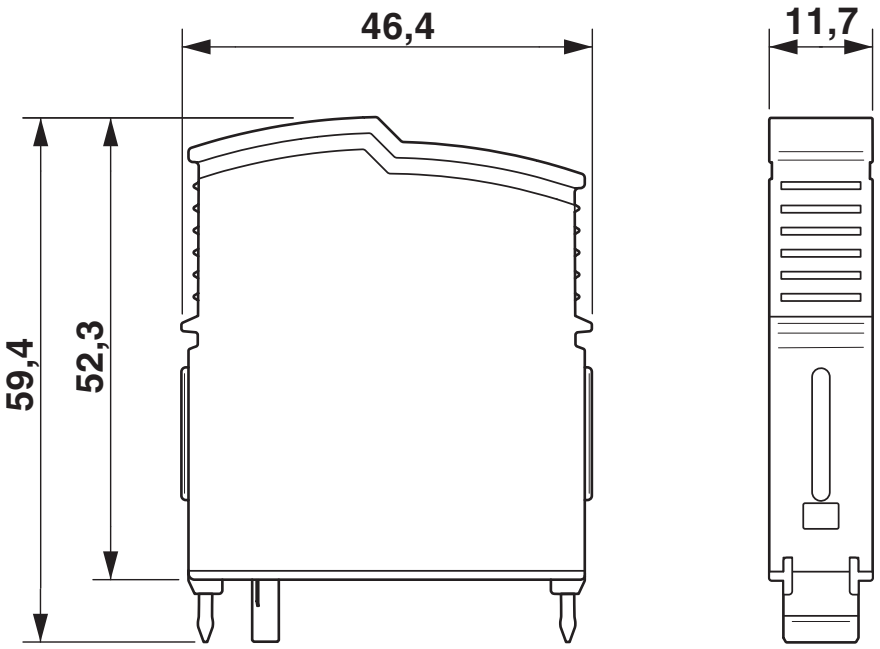

Circuit diagram



Approvals

To download certificates, visit the product detail page: https://www.phoenixcontact.com/us/products/2907877

cUL Recognized
Approval ID: FILE E 330181

UL Recognized
Approval ID: FILE E 330181

UAE-RoHS
Approval ID: 23-10-88707

Classifications

ECLASS

ECLASS-13.0	27171292
ECLASS-15.0	27171292

ETIM

ETIM 10.0	EC002496

UNSPSC

UNSPSC 21.0	39121600

Environmental product compliance

EU RoHS

Fulfills EU RoHS substance requirements	Yes, No exemptions

China RoHS

Environment friendly use period (EFUP)	EFUP-E
	No hazardous substances above the limits

EU REACH SVHC

REACH candidate substance (CAS No.)	No substance above 0.1 wt%

Phoenix Contact 2026 © - all rights reserved
https://www.phoenixcontact.com

Phoenix Contact USA
586 Fulling Mill Road
Middletown, PA 17057, United States
(+717) 944-1300
info@phoenixcon.com