TTC-6P-1X2-12DC-I-P - Surge protection plug

2907839

https://www.phoenixcontact.com/us/products/2907839

Please be informed that the data shown in this PDF document is generated from our online catalog. Please find the complete data in the user documentation. Our general terms of use for downloads are valid.

600 mA
IEC

12 V
IEC



Surge protection plug with integrated status indicator on the module for a 2-wire floating signal circuit. Nominal voltage: 12 V DC

Your advantages

- Space-saving and cost-saving with a narrow overall width of just 6 mm
- Continuous monitoring of protective devices, plus mechanical status indicator with optional remote signaling
- Finding the right product for all possible requirements in MCR applications is easy, thanks to the complete range of products with customized features
- Easy testing and documentation with CHECKMASTER 2 with pluggable protective modules
- The signal is not influenced during maintenance work, thanks to the impedance-neutral insertion and removal of protective plugs

ELEKTROGERÄTE RÜCKNAHME

Commercial data

Item number	2907839
Packing unit	1 pc
Minimum order quantity	1 pc
Sales key	CL02
Product key	CL216Z

GTIN	4055626633473
Weight per piece (including packing)	15.5 g
Weight per piece (excluding packing)	15.5 g
Customs tariff number	85363010
Country of origin	DE

Technical data

Product properties

Product type	Replacement plug
Product family	TERMITRAB complete
Type	Male

Insulation characteristics

Overvoltage category	III
Pollution degree	2

Electrical properties

Nominal voltage U_N	12 V DC

Connection data

Connection method	pluggable

Dimensions

Dimensional drawing	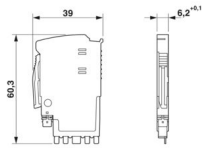
Width	6.2 mm +0.1 mm
Height	39 mm
Depth	60.3 mm

Material specifications

Color	light gray (RAL 7035)
	gray (RAL 7042)
Flammability rating according to UL 94	V-0
Insulating material	PBT
Housing material	PBT

Protective circuit

Nominal voltage U_N	12 V DC
Maximum continuous operating voltage U_C	15 V DC
Rated current	600 mA (56 °C)

Environmental and real-life conditions

Ambient conditions

Degree of protection	IP20
Ambient temperature (operation)	-40 °C ... 85 °C
Ambient temperature (storage/transport)	-40 °C ... 85 °C

Altitude	≤ 4000 m (amsl)
Permissible humidity (operation)	5 % ... 95 %

Standards and regulations

EN 61643-21

Standards/specifications	EN 61643-21
Note	2001 + A1:2009 + A2:2013
Standards/specifications	IEC 61643-21
Note	2000 + corrigendum 2001 + A1:2008, modified + A2:2012

Mounting

Mounting type	on base element

Drawings

Dimensional drawing

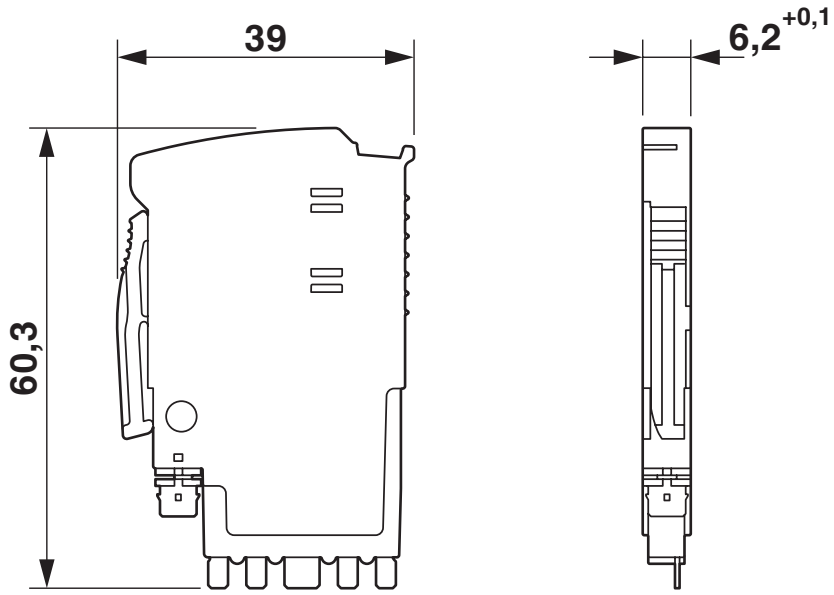

Circuit diagram

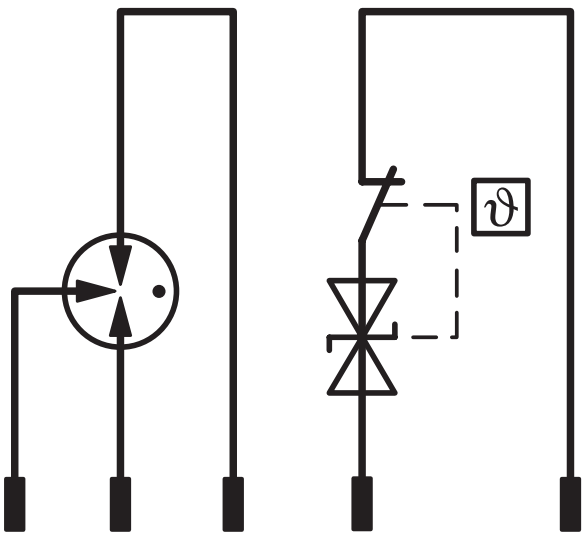

Approvals

To download certificates, visit the product detail page: https://www.phoenixcontact.com/us/products/2907839

CSA
Approval ID: 70136717

DNV GL
Approval ID: TAE000027G

UL Listed
Approval ID: FILE E 138168

CSAus
Approval ID: 70136717

UAE-RoHS
Approval ID: 22-06-16192

Classifications

ECLASS

ECLASS-13.0	27171501
ECLASS-15.0	27171501

ETIM

ETIM 10.0	EC001466

UNSPSC

UNSPSC 21.0	39121600

Environmental product compliance

EU RoHS

Fulfills EU RoHS substance requirements	Yes
Exemption	7(a)

China RoHS

Environment friendly use period (EFUP)	EFUP-50
	An article-related China RoHS declaration table can be found in the download area for the respective article under "Manufacturer declaration". For all articles with EFUP-E, no China RoHS declaration table issued and required.

EU REACH SVHC

REACH candidate substance (CAS No.)	Lead(CAS: 7439-92-1)
SCIP	0531cee1-b7d1-440c-894c-beabda9a1171

Phoenix Contact 2026 © - all rights reserved
https://www.phoenixcontact.com

Phoenix Contact USA
586 Fulling Mill Road
Middletown, PA 17057, United States
(+717) 944-1300
info@phoenixcon.com