ETD-BL-2T-I-230 - Timer relay

2907713

https://www.phoenixcontact.com/us/products/2907713

Please be informed that the data shown in this PDF document is generated from our online catalog. Please find the complete data in the user documentation. Our general terms of use for downloads are valid.



Compact impulse encoder with adjustable pulse and pause times (50 ms - 100 h), wide range power supply unit, with screw connection, 1 changeover contact

Product description

Increasingly higher demands are being placed on safety and system availability – across all sectors. Processes are becoming more and more complex, not only in mechanical engineering and the chemical industry, but also in plant and automation technology. Demands on power engineering are also increasing constantly.
The timer relays in the ETD series can be used to control time sequences in production and process technology.

Your advantages

- Time ranges from a few milliseconds to several days
- 2 floating changeover contact outputs

Commercial data

Item number	2907713
Packing unit	1 pc
Minimum order quantity	1 pc
Sales key	C442
Product key	DKF112
GTIN	4055626220758
Weight per piece (including packing)	80.6 g
Weight per piece (excluding packing)	79.9 g
Customs tariff number	85364900
Country of origin	AT

Technical data

Product properties

Product type	Timer relay
Operating mode	100% operating factor
Mechanical service life	approx. 2x 10^7 cycles

Insulation characteristics

Insulation	Basic insulation
Overvoltage category	III
Pollution degree	2

Electrical properties

Service life electrical	approx. 2x 10^5 cycles at ohmic load, 1000 VA
Nominal frequency	48 Hz ... 63 Hz
Nominal power consumption	2.5 VA (1 W)
Test voltage relay winding/relay contact	4 kV
Rated insulation voltage	300 V

Input data

Nominal power consumption	2.5 VA (1 W)
Input voltage range	24 V AC/DC ... 240 V AC/DC -10 % ... +15 %
Temperature coefficient, typical	≤ 0.01 %/K
Recovery time	500 ms
Function	Ip: Switched-mode beginning with the pause
	Ii: Switched-mode beginning with the pulse
Response delay function	no
Release delay function	no
Passing make contact function	no
Passing break contact function	no
Star/delta function	no
Pulse-forming function	no
Flashing function beginning with pause, fixed time	no
Clocking function beginning with pause, variable	yes
Flashing function beginning with pulse, fixed time	no
Clocking function beginning with pulse, variable	yes
Setting range time	50 ms ... 100 h (7 time end ranges)
Basic accuracy	± 1 % (of scale end value)
Setting accuracy	≤ 5 % (of scale end value)
Repeat accuracy	≤ 0.5 % ±5 ms

Control

Connection name	Non-floating, terminals A1-B1
Control pulse length	≥ 50 ms (DC)

	≥ 100 ms (AC)

Output data

Switching

Contact switching type	1 floating changeover contact
Maximum switching voltage	250 V AC (in acc. with IEC 60664-1)
Interrupting rating (ohmic load) max.	750 VA (3 A/250 V AC, module aligned, ≤ 5 mm spacing)
	1250 VA (5 A/250 V AC, module not aligned, ≥ 5 mm spacing)
Output fuse	5 A (fast-blow)

Connection data

Connection method	Screw connection
Stripping length	8 mm
Conductor cross-section rigid	0.5 mm² ... 2.5 mm²
Conductor cross-section flexible	0.5 mm² ... 2.5 mm²
Conductor cross-section AWG	20 ... 14
Tightening torque	1 Nm ... 1 Nm

Signaling

Status display	Green LED (POWER)
	Yellow LED (relay active)

Dimensions

Width	17.5 mm
Height	89.5 mm
Depth	65.5 mm

Material specifications

Color	gray (RAL 7042)
Flammability rating according to UL 94	V0

Environmental and real-life conditions

Ambient conditions

Degree of protection (Housing)	IP40 (Housing)
Degree of protection (Connection terminal blocks)	IP20 (Connection terminal blocks)
Ambient temperature (operation)	-25 °C ... 55 °C
	-25 °C ... 40 °C (corresponds to UL 508)
Ambient temperature (storage/transport)	-25 °C ... 70 °C
Climatic class	3K3 (in acc. with EN 60721)
Permissible humidity (operation)	15 % ... 85 %

Approvals

CE

Certificate	CE-compliant

UKCA

Certificate	UKCA-compliant

EMC data

Electromagnetic compatibility	Conformance with EMC directive
Low Voltage Directive	Conformance with Low Voltage Directive
Noise immunity	EN 61000-6-2

Noise emission

Standards/regulations	EN 61000-6-4

Standards and regulations

Standards/regulations	EN 50178

Mounting

Mounting type	DIN rail mounting
Assembly note	on standard DIN rail NS 35 in accordance with EN 60715
Mounting position	any

Drawings

Block diagram

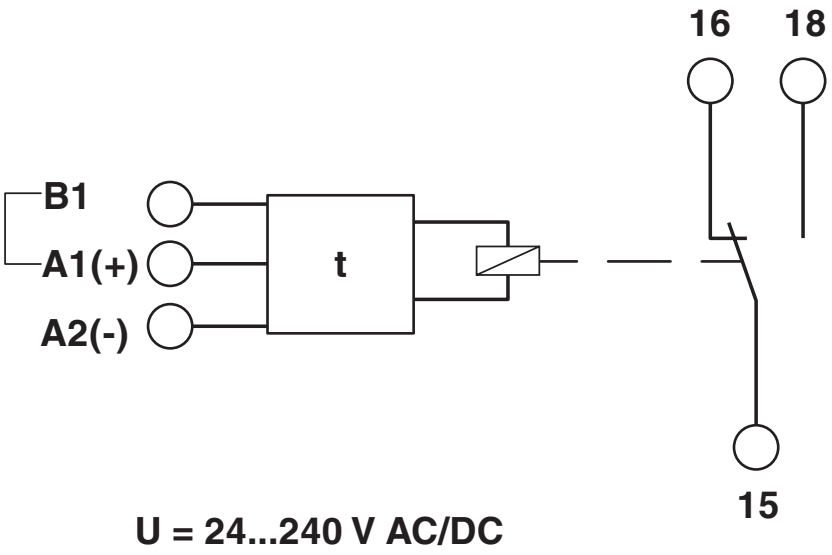

Approvals

To download certificates, visit the product detail page: https://www.phoenixcontact.com/us/products/2907713

EAC
Approval ID: RU C-DE.**08.B-00957

Classifications

ECLASS

ECLASS-13.0	27371605
ECLASS-15.0	27371605

ETIM

ETIM 10.0	EC001439

UNSPSC

UNSPSC 21.0	39122300

Environmental product compliance

EU RoHS

Fulfills EU RoHS substance requirements	Yes, No exemptions

China RoHS

Environment friendly use period (EFUP)	EFUP-E
	No hazardous substances above the limits

EU REACH SVHC

REACH candidate substance (CAS No.)	No substance above 0.1 wt%

EF3.1 Climate Change

CO2e kg	9.063 kg CO2e

Phoenix Contact 2026 © - all rights reserved
https://www.phoenixcontact.com

Phoenix Contact USA
586 Fulling Mill Road
Middletown, PA 17057, United States
(+717) 944-1300
info@phoenixcon.com