FLKM 4X14-PA/SC/DIO/S7-1500 - Front adapter

2907381

https://www.phoenixcontact.com/us/products/2907381

Please be informed that the data shown in this PDF document is generated from our online catalog. Please find the complete data in the user documentation. Our general terms of use for downloads are valid.



VARIOFACE front adapter with screw connection, for SIMATIC® S7-1500 digital 35 mm modules, 4x 8 or 2x 8 channels can be connected.

Commercial data

Item number	2907381
Packing unit	1 pc
Minimum order quantity	1 pc
Sales key	C421
Product key	DK231S
GTIN	4055626256511
Weight per piece (including packing)	108.77 g
Weight per piece (excluding packing)	108.77 g
Customs tariff number	85369010
Country of origin	RO

Technical data

Product properties

Product type	Front adapter

Insulation characteristics

Overvoltage category	II
Pollution degree	2

Electrical properties

Operating voltage (DC)	≤ 50 V DC
Nominal operating mode	100% operating factor
Current (Per path)	≤ 1 A
Current (Total current per byte)	≤ 3 A (With feed-in from the module side)
Current (Total current)	≤ 12 A (When supplying via the front adapter)
Rated surge voltage	0.5 kV

Supported controller: SIEMENS S7-1500

Suitable I/O card	6ES7521-1BH00-0AB0
	6ES7521-1BH50-0AA0
	6ES7521-1BL00-0AB0
	6ES7522-1BH00-0AB0
	6ES7522-1BH01-0AB0
	6ES7522-1BL00-0AB0
	6ES7522-1BL01-0AB0

Connection data

Field level

Connection method	IDC/FLK pin strip
Number of connections	4
Number of positions	14
Pitch	2.54 mm

Field level

Connection method	IDC/FLK pin strip
Number of connections	2
Number of positions	14
Pitch	2.54 mm

Supply

Connection method	Screw connection
Stripping length	10 mm
Conductor cross-section rigid	0.25 mm² ... 1.5 mm² (with ferrule)
	0.5 mm² ... 2.5 mm² (without ferrule)
Conductor cross-section flexible	0.25 mm² ... 1.5 mm² (with ferrule)

	0.5 mm² ... 2.5 mm² (without ferrule)
Tightening torque	0.4 Nm

Dimensions

Item dimensions

Width	29.8 mm
Height	130.4 mm
Depth	46 mm

Environmental and real-life conditions

Ambient conditions

Degree of protection	IP20
Ambient temperature (operation)	-25 °C ... 60 °C
Ambient temperature (storage/transport)	-40 °C ... 70 °C

Standards and regulations

Standards/regulations	IEC 61131-2

Notes

Notes on operation	For proper use, the specifications of the installation directive (see Downloads) must be observed. For applications or use with third-party products, the specifications, and the safety and warning instructions of the respective third-party manufacturer must also be met.

Drawings

Circuit diagram

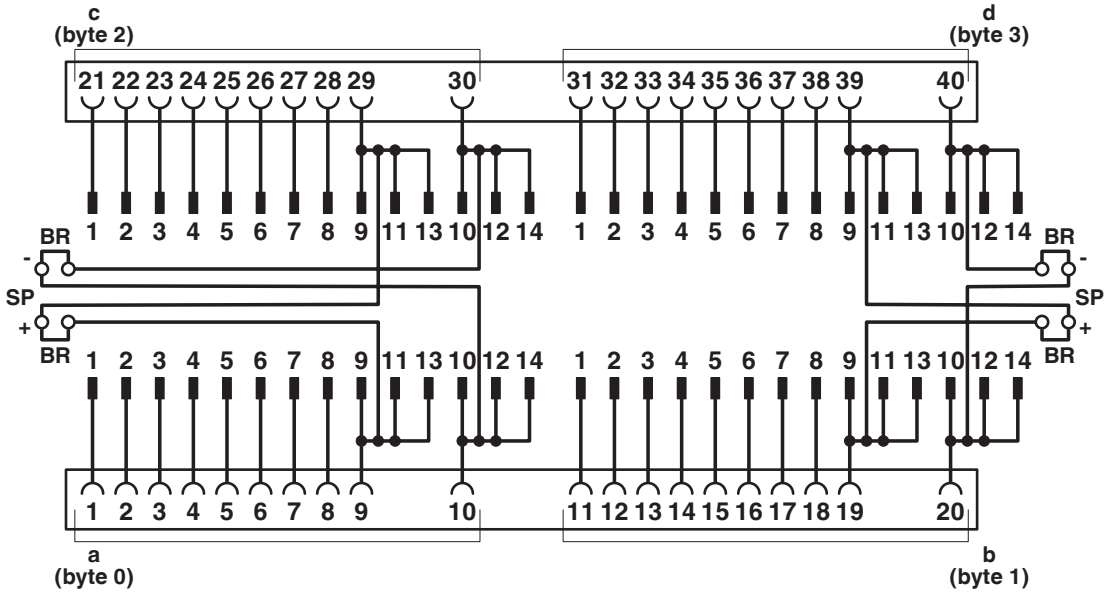

Connection scheme for FLKM 4X14-PA/.../DIO/S7-1500

Approvals

To download certificates, visit the product detail page: https://www.phoenixcontact.com/us/products/2907381

EAC
Approval ID: RU C-DE.A*30.B00767

UL Listed
Approval ID: E238705

cUL Listed
Approval ID: E238705

Classifications

ECLASS

ECLASS-13.0	27242292
ECLASS-15.0	27242292

ETIM

ETIM 10.0	EC002584

UNSPSC

UNSPSC 21.0	32151600

Environmental product compliance

EU RoHS

Fulfills EU RoHS substance requirements	Yes, No exemptions

China RoHS

Environment friendly use period (EFUP)	EFUP-E
	No hazardous substances above the limits

EU REACH SVHC

REACH candidate substance (CAS No.)	No substance above 0.1 wt%

Phoenix Contact 2026 © - all rights reserved
https://www.phoenixcontact.com

Phoenix Contact USA
586 Fulling Mill Road
Middletown, PA 17057, United States
(+717) 944-1300
info@phoenixcon.com