QUINT4-UPS/24DC/24DC/20 - Uninterruptible power supply

2907071

https://www.phoenixcontact.com/us/products/2907071

Please be informed that the data shown in this PDF document is generated from our online catalog. Please find the complete data in the user documentation. Our general terms of use for downloads are valid.



QUINT DC UPS, IQ Technology, DIN rail mounting, Screw connection, input: 24 V DC, output: 24 V DC / 20 A, charging current: 5 A

Product description

The intelligent QUINT UPS for integration into established industrial networks: your systems continue to be supplied with uninterrupted power, even in the event of a mains failure. The battery management system with IQ Technology and a powerful battery charger ensures superior system availability.

Your advantages

- Easy integration into networks using PROFINET, EtherNet/IP, EtherCAT® and USB interfaces
- Evaluation of state of health (SOH) and state of charge (SOC), thanks to the intelligent battery management system (BMS)
- Automatic recognition of the battery capacities and technologies (VRLA-WTR, LI-ION)
- Monitoring of output current and voltage, as well as manual connection and disconnection of the system
- SFB Technology selectively trips standard miniature circuit breakers. Loads connected in parallel continue working.

ELEKTROGERÄTE RÜCKNAHME

Commercial data

Item number	2907071
Packing unit	1 pc
Minimum order quantity	1 pc
Sales key	CM21
Product key	CMUI43
GTIN	4055626171272
Weight per piece (including packing)	578 g

Weight per piece (excluding packing)	504 g
Customs tariff number	85371091
Country of origin	MX

Technical data

Input data

DC operation

Input voltage	24 V DC
Input voltage range	18 V DC ... 30 V DC
Electric strength, max.	35 V DC (Protected against polarity reversal)
Internal input fuse	no
Typical national grid voltage	24 V DC
Voltage type of supply voltage	DC
Inrush current	≤ 8 A (≤ 4 ms)
Reverse polarity protection	yes
Fixed backup threshold	22 V DC
	30 V DC
Dynamic activation threshold	> 1 V / 100 ms
Switch-on time	max. 3 s
Switch-on time during battery operation (Bat.-Start)	8 s
Voltage drop, input/output	0.4 V DC
Current consumption I_N (U_N, I_{OUT} = I_N, I_{charge} = 0)	20.1 A
Current consumption I_{max} (U_N, I_{OUT} = $I_{Stat.Boost}$, I_{Charge} = max)	31.4 A
Current consumption $I_{No-Load}$(U_N, I_{OUT} = 0, I_{charge} = 0)	50 mA
Current consumption I_{charge} (U_N, I_{OUT} = 0, I_{charge} = max)	6.1 A
Power consumption P_N (U_N, I_{OUT} = I_N, I_{charge} = 0)	474 W
Power consumption P_{max} (U_N, I_{OUT} = $I_{Stat.Boost}$, I_{charge} = max)	738 W
Power consumption $P_{No-Load}$ (U_N, I_{OUT} = 0, I_{charge} = 0)	1.3 W
Power consumption P_{charge} (U_N, I_{OUT} = 0, I_{charge} = max)	145 W

Output data

Efficiency	typ. 98 %
Number of outputs	1
Short-circuit-proof	yes
No-load proof	yes
Switch-over time	0 ms
UPS connection in parallel	yes, with decoupling modules (to increase the buffer time and for redundancy)
UPS connection in series	no
Energy storage device connection in parallel	Yes, 5 (observe line protection)
Energy storage device connection in series	no

Mains operation

Output voltage	24 V DC (U_{OUT} = U_{IN} - 0.4 V DC)
Output voltage range	18 V DC ... 30 V DC (U_{OUT} = U_{IN} - 0.4 V DC)
	18 V DC ... 32 V DC

Output current I_N	20 A
Static Boost ($I_{Stat.Boost}$)	25 A
Dynamic Boost ($I_{Dyn.Boost}$)	30 A (5 s)
Selective Fuse Breaking (I_{SFB})	120 A (15 ms)
Output power P_{OUT} (U_N, $I_{OUT} = I_N$)	480 W
Output power P_{OUT} (U_N, $I_{OUT} = I_{stat.Boost}$)	600 W
Output power P_{OUT} (U_N, $I_{OUT} = I_{dyn.Boost}$)	720 W (5 s)
Power dissipation No load (U_N, $I_{Out} = 0$, $I_{Charge} = 0$)	3 W
Power dissipation Nominal load (U_N, $I_{Out} = I_N$, $I_{Charge} = 0$)	10 W

Battery operation

Output voltage	24 V DC ($U_{OUT} = U_{BAT}$ - 0.4 V DC)
Output voltage range	19 V DC ... 28 V DC ($U_{OUT} = U_{BAT}$ - 0.4 V DC)
Output current I_N	20 A
Static Boost ($I_{Stat.Boost}$)	25 A
Dynamic Boost ($I_{Dyn.Boost}$)	30 A (5 s)
Selective Fuse Breaking (I_{SFB})	120 A (15 ms)
Output power P_{OUT} (U_N, $I_{OUT} = I_N$)	480 W
Output power P_{OUT} (U_N, $I_{OUT} = I_{stat.Boost}$)	600 W
Output power P_{OUT} (U_N, $I_{OUT} = I_{dyn.Boost}$)	720 W (5 s)
Power dissipation No load (U_N, $I_{Out} = 0$, $I_{Charge} = 0$)	2 W
Power dissipation Nominal load (U_N, $I_{Out} = I_N$, $I_{Charge} = 0$)	11 W

Energy storage

Nominal voltage U_N	24 V DC
End-of-charge voltage (temperature-compensated)	25 V DC ... 32 V DC
End-of-charge voltage (configurable)	27.6 V DC
Charging current (configurable)	max. 5 A
Nominal capacity (without additional charger)	3 Ah ... 135 Ah
Max. capacity	135 Ah
Charging time	165 min (12 Ah)
Buffer time	22 min (12 Ah)
Deep discharge protection (configurable)	19.2 V DC
Battery technology	VRLA, VRLA-WTR, LI-ION
Charge characteristic curve	IU_0U
IQ-Technology	yes
Temperature sensor	yes
Temperature compensation (configurable)	42 mV/K

Connection data

Input

Position	1.x

Connection technology

Position marking	1.1 (+), 1.2 (-)

Conductor connection

Connection method	Screw connection
rigid (Terminal block)	0.2 mm² ... 6 mm²
flexible (Klemme)	0.2 mm² ... 4 mm²
flexible with ferrule without plastic sleeve (Terminal block)	0.2 mm² ... 4 mm²
flexible with ferrule with plastic sleeve (Terminal block)	0.2 mm² ... 4 mm²
AWG (Terminal block)	30 ... 10 (Cu)
Stripping length (starr/flexibel)	8 mm (Rigid/flexible/ferrule)
Tightening torque (EU)	0.5 Nm ... 0.6 Nm
Tightening torque ()	5 lb_fin. ... 7 lb_fin.
Drive form screw head	Slotted L

Output

Position	2.x

Connection technology

Position marking	2.1 (+), 2.2 (-)

Conductor connection

Connection method	Screw connection
rigid (Terminal block)	0.2 mm² ... 6 mm²
flexible (Klemme)	0.2 mm² ... 4 mm²
flexible with ferrule without plastic sleeve (Terminal block)	0.2 mm² ... 4 mm²
flexible with ferrule with plastic sleeve (Terminal block)	0.2 mm² ... 4 mm²
AWG (Terminal block)	30 ... 10 (Cu)
Stripping length (starr/flexibel)	8 mm (Rigid/flexible/ferrule)
Tightening torque (EU)	0.5 Nm ... 0.6 Nm
Tightening torque ()	5 lb_fin. ... 7 lb_fin.
Drive form screw head	Slotted L
Screwdriver blade	0.8 x 4 mm

Signal

Position	3.x

Connection technology

Position marking	3.1 (24V 20mA), 3.2 / 3.3 (Alarm), 3.4 (Bat.-Mode), 3.5 (Ready), 3.6 (Remote), 3.7 (PS Boost), 3.8 (Bat.-Start), 3.9 (SGnd)

Conductor connection

Connection method	Push-in connection
rigid (Terminal block)	0.2 mm² ... 1 mm²
flexible (Klemme)	0.2 mm² ... 1 mm²
flexible with ferrule without plastic sleeve (Terminal block)	0.2 mm² ... 0.75 mm²
flexible with ferrule with plastic sleeve (Terminal block)	0.2 mm² ... 0.75 mm²
AWG (Terminal block)	24 ... 16 (Cu)
Stripping length (starr/flexibel)	8 mm (Rigid/flexible/ferrule)

Battery

Position	4.x

Connection technology

Position marking	4.1 (+), 4.2 (-), 4.3 (⎍⎍)

Conductor connection

Connection method	Screw connection
rigid (Terminal block)	0.2 mm² ... 6 mm²
flexible (Klemme)	0.2 mm² ... 4 mm²
flexible with ferrule without plastic sleeve (Terminal block)	0.2 mm² ... 4 mm²
flexible with ferrule with plastic sleeve (Terminal block)	0.2 mm² ... 4 mm²
AWG (Terminal block)	30 ... 10 (Cu)
Stripping length (starr/flexibel)	8 mm (Rigid/flexible/ferrule)
Tightening torque (EU)	0.5 Nm ... 0.6 Nm
Tightening torque ()	5 lb_f-in. ... 7 lb_f-in.
Drive form screw head	Slotted L
Screwdriver blade	0.8 x 4 mm

Signaling

LED signaling

Types of signaling	DC OK (green)
	Alarm (red)
	Bat.-Mode (yellow)
	SOC (red, green)
	Data (red, green)

Signal state Alarm

Connection labeling	3.2, 3.3
Channel	DO (digital output)
Switch contact (floating)	OptoMOS
State (configurable)	Group alarm
State condition (configurable)	Alarm threshold
Switching voltage	max. 30 V AC/DC
State - signal assignment	NC (Normally Closed)
Current carrying capacity	max. 100 mA
LED status indicator	red (Alarm)

Signal state Bat.-Mode

Connection labeling	3.4 (+)
Channel	DO (digital output)
Semiconductor output	MOSFET
State (configurable)	Bat.-Mode
State condition (configurable)	U_{IN} < 18 V DC, U_{IN} > 30 V DC, Bat.-Start
Output voltage	19 V DC ... 28 V DC (buffered)

Output can be loaded	max. 20 mA
State - signal assignment	active - high
Reference potential	3.9 (SGnd, identical to 1.2, 2.2, 4.2)
LED status indicator	Yellow (Bat.-Mode)

Signal state Ready

Connection labeling	3.5 (+)
Channel	DO (digital output)
Semiconductor output	MOSFET
State (configurable)	Ready
State condition (configurable)	SOC = 100 %
Output voltage	19 V DC ... 28 V DC (buffered)
Output can be loaded	max. 20 mA
State - signal assignment	active - high
Reference potential	3.9 (SGnd, identical to 1.2, 2.2, 4.2)
LED status indicator	Green (state of charge - SOC)

Signal state Remote

Connection labeling	3.6 (+)
Channel	DI (digital input)
State (configurable)	Disconnection
State condition	Low level
Low signal	Input connected with SGnd (3.9) or <5 V DC
High signal	Input not connected or connected with 13 … 30 V DC
Signal - state assignment	low - active
Reference potential	3.9 (SGnd, identical to 1.2, 2.2, 4.2)
LED status indicator	Green, flashing (DC OK)

Signal state PS Boost

Connection labeling	3.7 (+)
Channel (configurable)	DI (digital input) default, AI (analog input)
State (configurable)	Charging current reduced
State condition	Low level
Low signal	Input connected with SGnd (3.9), <5 V DC or not connected
High signal	Input connected with 13 … 30 V DC
Signal - state assignment	low - active
Analog	4 mA ... 20 mA (Offset zero point)
Reference potential	3.9 (SGnd, identical to 1.2, 2.2, 4.2)
Unit signal	I (mA)
Resistance	390 Ω

Signal state Bat.-Start

Connection labeling	3.8 (+)
Channel	DI (digital input)
State condition	Low level (30 ms)
Low signal	Input connected with SGnd (3.9) or Bat

High signal	Input not connected or connected with >U_{Bat}
Signal - state assignment	low - active
Reference potential	3.9 (SGnd, identical to 1.2, 2.2, 4.2)
LED status indicator	Yellow (Bat.-Mode)

Signal output 24V DC 20 mA, SGnd

Connection labeling	3.1 (+), 3.9 (SGnd)
Output voltage	24 V DC
Output can be loaded	max. 20 mA
Reference potential	3.9 (SGnd, identical to 1.2, 2.2, 4.2)

Product properties

Product type	DC UPS
Product family	QUINT DC UPS
MTBF (IEC 61709, SN 29500)	> 1940000 h (25 °C)
	> 1157000 h (40 °C)
	> 568100 h (60 °C)
Environmental protection directive	RoHS Directive 2011/65/EU
	WEEE
	Reach

Insulation characteristics

Protection class	III (without PE)
Overvoltage category (EN 61010-1)	II (≤ 4000 m)
Overvoltage category (IEC 61010-2-201)	II (≤ 4000 m)
Degree of pollution	2

Life expectancy (electrolytic capacitors)

Time	192072 h

Dimensions

Item dimensions

Width	40 mm
Height	130 mm
Depth	132 mm
Depth (Device depth (DIN rail mounting))	125 mm (Device depth (DIN rail mounting))

Item dimensions with alternative mounting

Width	123 mm
Height	130 mm
Depth	42 mm

Installation dimensions

Installation distance right/left (active)	5 mm / 5 mm (P_{Out} ≥50%)
Installation distance right/left (passive)	0 mm / 0 mm (P_{Out} ≥50%)
Installation distance right/left (active, passive)	0 mm / 0 mm (P_{Out} ≤50 %)

Installation distance top/bottom (active)	50 mm / 50 mm (P_{Out} ≥50%)
Installation distance top/bottom (passive)	40 mm / 20 mm (P_{Out} ≥50%)
Installation distance top/bottom (active, passive)	40 mm / 20 mm (P_{Out} ≤50 %)

Mounting

Mounting type	DIN rail mounting
Mounting position	On horizontal DIN rail NS 35/7.5 and NS 35/15 acc. to EN 60715

Material specifications

Flammability rating according to UL 94 (housing / terminal blocks)	V0
Housing material	Metal
Hood version	Stainless steel X6Cr17
Side element version	Aluminum AlMg3

Environmental and real-life conditions

Ambient conditions

Degree of protection	IP20
Ambient temperature (operation)	-25 °C ... 70 °C (> 60 °C Derating: 2,5 %/K)
Ambient temperature (storage/transport)	-40 °C ... 85 °C
Ambient temperature (start-up type tested)	-40 °C
Maximum altitude	≤ 4000 m
Climatic class	3K3 (EN 60721)
Max. permissible relative humidity (operation)	≤ 95 % (at 25 °C, non-condensing)
Shock	18 ms, 30g, in each space direction (according to IEC 60068-2-27)
Vibration (operation)	2.3g

Standards and regulations

Protective extra-low voltage

Standard designation	Protective extra-low voltage
Standards/specifications	IEC 61010-1 (SELV)
	IEC 61010-2-201 (PELV)

Approvals

UL approval

Identification	UL/C-UL Listed UL 61010-1

UL approval

Identification	UL/C-UL Listed UL 61010-2-201

UL approval

Identification	UL/C-UL Listed ANSI/ISA-12.12.01 Class I, Division 2, Groups A, B, C, D T4 (Hazardous Location)

CSA

Identification	CAN/CSA-C22.2 No. 61010-1-12

CSA

Identification	CAN/CSA-IEC 61010-2-201

CSA

Identification	CAN/CSA-C22.2 No. 213 Class I, Division 2, Groups A, B, C, D T4 (Hazardous Location)

CB scheme

Identification	IEC 61010-1
	IEC 61010-2-201

DNV

Identification	Class Guideline DNVGL-CG-0339
Note	Location classes: Temperature D (see Application/Limitation), Humidity B, Vibration A/C, EMC B

EMC data

Electromagnetic compatibility	Conformance with EMC Directive 2014/30/EU
Low Voltage Directive	Conformance with Low Voltage Directive 2014/35/EC
EMC requirements for noise emission	EN 61000-6-3
	EN 61000-6-4
EMC requirements for noise immunity	EN 61000-6-1
	EN 61000-6-2
Noise immunity	Immunity in accordance with EN 61000-6-1 (residential), EN 61000-6-2 (industrial), and EN 61000-6-5 (switching devices), IEC/EN 61850-3 (power supply)

Noise emission

Standards/regulations	Additional basic standard EN 61000-6-5 (immunity in switching devices), IEC/EN 61850-3 (power supply)

Electrostatic discharge

Standards/regulations	EN 61000-4-2

Electrostatic discharge

Contact discharge	8 kV (Test Level 4)
Discharge in air	15 kV (Test Level 4)
Comments	Criterion B

Electromagnetic HF field

Standards/regulations	EN 61000-4-3

Electromagnetic HF field

Frequency range	80 MHz ... 1 GHz
Test field strength	20 V/m (Test Level 3)
Frequency range	1 GHz ... 6 GHz

Test field strength	10 V/m (Test Level 3)
Frequency range	1 GHz ... 6 GHz
Test field strength	10 V/m (Test Level 3)
Comments	Criterion A

Fast transients (burst)

Standards/regulations	EN 61000-4-4

Fast transients (burst)

Input	4 kV (Test Level 4 - asymmetrical)
Output	4 kV (Test Level 4 - asymmetrical)
Signal	4 kV (Test Level 4 - asymmetrical)
Comments	Criterion B

Surge voltage load (surge)

Standards/regulations	EN 61000-4-5

Surge voltage load (surge)

Input	1 kV (Test Level 3 - symmetrical)
	2 kV (Test Level 3 - asymmetrical)
Output	1 kV (Test Level 3 - symmetrical)
	2 kV (Test Level 3 - asymmetrical)
Signal	1 kV (Test Level 2 - asymmetrical)
Comments	Criterion B

Conducted interference

Standards/regulations	EN 61000-4-6

Conducted interference

Input/output/signal	asymmetrical
Frequency range	0.15 MHz ... 80 MHz
Comments	Criterion A
Voltage	10 V (Test Level 3)

Power frequency magnetic field

Standards/regulations	EN 61000-4-8
Frequency	16.67 Hz
	50 Hz
	60 Hz
Test field strength	100 A/m
Additional text	60 s
Comments	Criterion A
Frequency	50 Hz
	60 Hz
Frequency range	50 Hz ... 60 Hz
Test field strength	1 kA/m
Additional text	3 s

Frequency	0 Hz
Test field strength	300 A/m
Additional text	DC, 60 s

Criteria

Criterion A	Normal operating behavior within the specified limits.
Criterion B	Temporary impairment to operational behavior that is corrected by the device itself.

QUINT4-UPS/24DC/24DC/20 - Uninterruptible power supply

2907071

https://www.phoenixcontact.com/us/products/2907071

Drawings

Block diagram

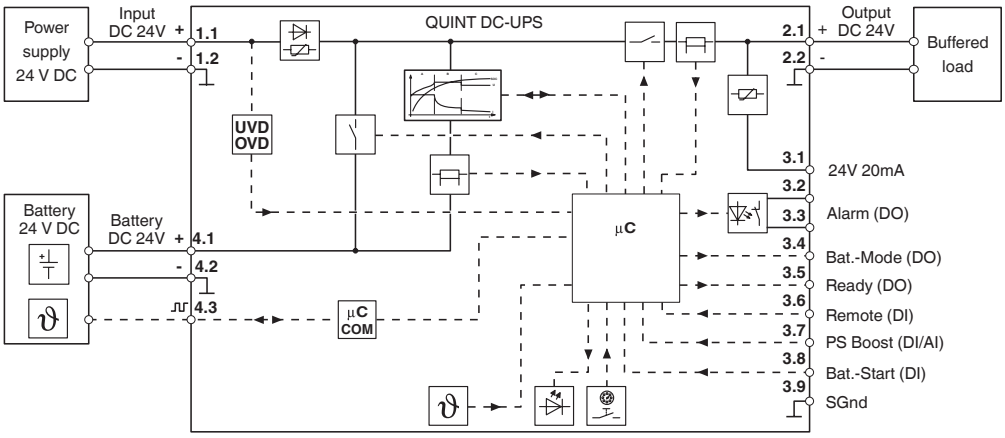

Block diagram

Graphic

Load Current	Buffertime																												
	Minutes															Hours														
	1	2	3	4	5	6	7	8	9	10	20	30	40	45	50	1	2	3	4	5	6	7	8	9	10	12	14	16	18	20	50	100
1 A																														2x		
2 A																														2x		
3 A																												2x	2x	2x		
5 A																							2x	2x	2x	2x	2x	2x				
7 A																				2x	2x	2x	2x	2x	2x							
10 A																			2x	2x	2x	2x	2x									
15 A																	2x	2x	2x													
20 A																	2x	2x														
25 A																	2x															
30 A																2x																
35 A														2x	2x	2x																
40 A													2x	2x	2x	2x																

2x: In this case, two battery modules of the same capacity are required. The data is based on an ambient temperature of +25 °C at the start of use.

1274520 UPS-BAT/PB/24DC/1.2AH

1274119 UPS-BAT/PB/24DC/12AH

1474660 UPS-BAT/PB/24DC/110AH

1274117 UPS-BAT/PB/24DC/4AH

1348516 UPS-BAT/PB/24DC/20AH

1274118 UPS-BAT/PB/24DC/7AH

1354641 UPS-BAT/PB/24DC/40AH

QUINT DC UPS buffer times for PB battery module

Graphic

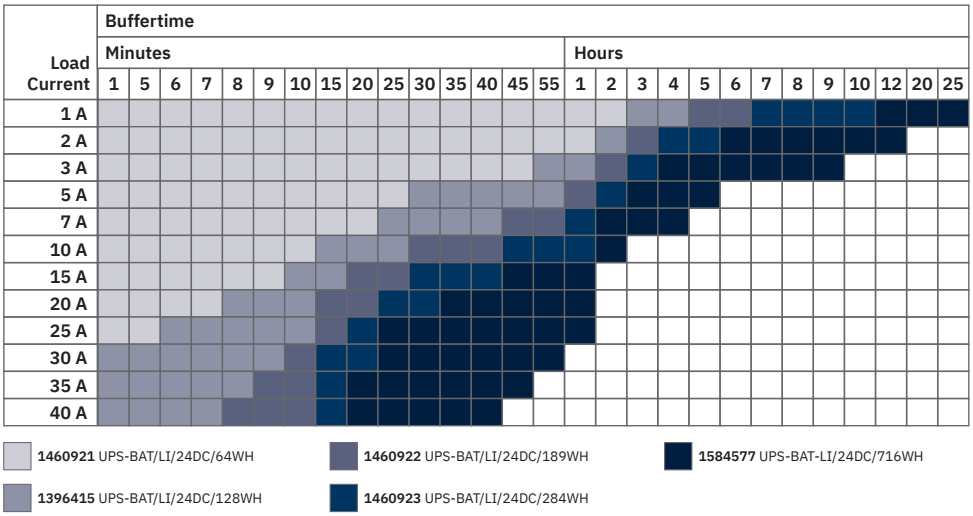

QUINT DC UPS buffer times for LI battery module

Graphic

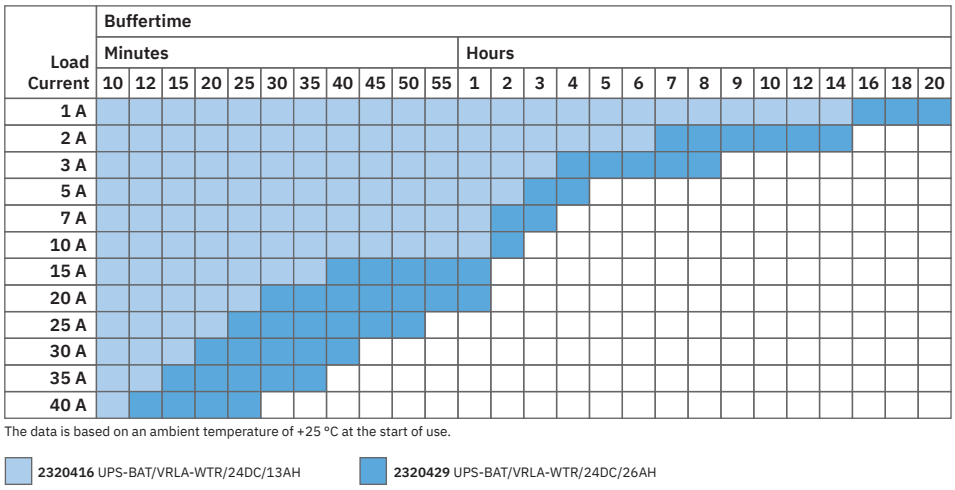

QUINT DC UPS buffer times and VRLA-WTR battery module

Approvals

To download certificates, visit the product detail page: https://www.phoenixcontact.com/us/products/2907071

EAC
Approval ID: RU S-DE.BL08.W.00764

EAC
Approval ID: RU S-DE.BL08.W.00764

DNV
Approval ID: TAA00001YD

KC
Approval ID: R-R-PCK-2907071

LR
Approval ID: LR21417906TA-01

NK
Approval ID: TA26283M

BV
Approval ID: 69394/A1 BV

RINA
Approval ID: ELE382621XG

ABS
Approval ID: 23-2416092-PDA

IECEE CB Scheme
Approval ID: DK-68191-M1-UL

cULus Listed
Approval ID: E123528-20171026

IECEE CB Scheme
Approval ID: DK-68191-M1-UL

ABS
Approval ID: 23-2416092-PDA

BV
Approval ID: 69394/A1 BV

NK
Approval ID: TA26283M

RINA
Approval ID: ELE382621XG

LR
Approval ID: LR21417906TA-01

cULus Listed
Approval ID: E123528-20171026

EAC
Approval ID: RU-DE.B.00184/20

EAC
Approval ID: RU-DE.B.00184/20

KC
Approval ID: R-R-PCK-2907071

DNV
Approval ID: TAA00001YD

cULus Listed
Approval ID: E199827-20180227

cULus Listed
Approval ID: E199827-20180227

Classifications

ECLASS

ECLASS-13.0	27040705
ECLASS-15.0	27040705

ETIM

ETIM 10.0	EC000382

UNSPSC

UNSPSC 21.0	39121000

Environmental product compliance

EU RoHS

Fulfills EU RoHS substance requirements	Yes
Exemption	7(a), 7(c)-I

China RoHS

Environment friendly use period (EFUP)	EFUP-25
	An article-related China RoHS declaration table can be found in the download area for the respective article under "Manufacturer declaration". For all articles with EFUP-E, no China RoHS declaration table issued and required.

EU REACH SVHC

REACH candidate substance (CAS No.)	Diboron trioxide(CAS: 1303-86-2)
	Lead(CAS: 7439-92-1)
SCIP	cc92cc7d-9f69-4d94-ac95-5937726c920e

Phoenix Contact 2026 © - all rights reserved
https://www.phoenixcontact.com

Phoenix Contact USA
586 Fulling Mill Road
Middletown, PA 17057, United States
(+717) 944-1300
info@phoenixcon.com