MINI MCR-2-T-2RO-PT - Temperature limit switch

2906877

https://www.phoenixcontact.com/us/products/2906877

Please be informed that the data shown in this PDF document is generated from our online catalog. Please find the complete data in the user documentation. Our general terms of use for downloads are valid.

CRA-READY



Universally configurable temperature limit value switch with two transistor outputs for the connection of 2, 3, and 4-conductor resistance thermometers and thermocouples. Configurable via DIP switch or software, push-in connection technology

Product description

Universally configurable temperature limit value switch with two transistor outputs for the connection of 2, 3, and 4-conductor resistance thermometers and thermocouples. You can configure the device using one of the free software solutions available or your smartphone. Default settings can also be made directly on the device by simply using the DIP switches (see configuration table). The temperature limit value switch supports fault monitoring and NFC communication.

Commercial data

Item number	2906877
Packing unit	1 pc
Minimum order quantity	1 pc
Sales key	C404
Product key	DK1127
GTIN	4055626131566
Weight per piece (including packing)	118.2 g
Weight per piece (excluding packing)	116.7 g
Customs tariff number	85437090
Country of origin	DE

Technical data

Notes

Note on application

Note on application	As things stand now, we are preparing the product so that, as of December 11, 2027, it will comply with the requirements of the EU Cyber Resilience Act (CRA) based on the information currently available regarding the CRA.

Utilization restriction

EMC note	EMC: class A product, see manufacturer's declaration in the download area

Product properties

Product type	Limit value switch
Product family	MINI Analog Pro
No. of channels	1
Configuration	DIP switches
	Software
	App

System properties

Functionality

Configuration	DIP switches
	Software
	App

Electrical properties

Electrical isolation	3-way isolation
Electrical isolation between input and output	yes
Switching point accuracy	< 0.1 %
Step response (0–99%)	300 ms
	570 ms
	380 ms
	300 ms
	570 ms
Maximum temperature coefficient	0.01 %/K

Electrical isolation

Overvoltage category	II
Pollution degree	2

Electrical isolation Input/output/power supply IEC/EN 61010-1

Standards/regulations	IEC/EN 61010-1
Rated insulation voltage	300 V_{rms}

Test voltage	3 kV AC (50 Hz, 60 s)
Insulation	Reinforced insulation

Supply

Nominal supply voltage	24 V DC
Supply voltage range	9.6 V DC ... 30 V DC (The DIN rail connector (ME 6,2 TBUS-2 1,5/5-ST-3,81 GN, item no. 2869728) can be used to bridge the supply voltage. It can be snapped onto a 35 mm DIN rail in accordance with EN 60715)
Typical current consumption	20 mA (12 V DC)
	10 mA (24 V DC)
Power consumption	350 mW

Input data

Signal

Number of inputs	1

Measurement

Number of inputs	1
Configurable/programmable	Yes
Sensor types (RTD) that can be used	Pt, Ni, Cu sensors
Sensor types that can be used (TC)	B, E, J, K, N, R, S, T, L, U, A-1, A-2, A-3, M, L
Available input sources	Resistance thermometers
	Thermocouples
Temperature measuring range	-250 °C ... 2500 °C (RTD)
Temperature measuring range	≥ 20 K (RTD)
Temperature measuring range: B	500 °C ... 1820 °C
Temperature measuring range: E	-230 °C ... 1000 °C
Temperature measuring range: J	-210 °C ... 1200 °C
Temperature measuring range: K	-250 °C ... 1372 °C
Temperature measuring range: N	-200 °C ... 1300 °C
Temperature measuring range: R	-50 °C ... 1768 °C
Temperature measuring range: S	-50 °C ... 1768 °C
Temperature measuring range: T	-200 °C ... 400 °C
Temperature measuring range: L	-200 °C ... 900 °C
Temperature measuring range: U	-200 °C ... 600 °C
Temperature measuring range: A-1	0 °C ... 2500 °C
Temperature measuring range: A-2	0 °C ... 1800 °C
Temperature measuring range: A-3	0 °C ... 1800 °C
Temperature measuring range: M	-200 °C ... 100 °C
Temperature measuring range: L	-200 °C ... 800 °C
Sensor input current	≈ ⎿⎿⎾⎾⎾ µA (RTD)
Max. permissible overall conductor resistance	≤ 25 Ω (Per line, RTD in 3- or 4-conductor technology)
	≤ 50 Ω (adjustable, RTD in 2-conductor technology)
Linear resistance measuring range	0 Ω ... 4000 Ω (RTD)

Linear mV signal range	-500 mV ... 500 mV (RTD)
Connection technology	2-, 3-, 4-conductor

Output data

Switching: Transistor

Number of outputs	2
Contact switching type	2 N/O contacts
Maximum switching voltage	30 V DC
Max. switching current	100 mA (30 V)

Connection data

Connection method	Push-in connection
Stripping length	10 mm
Conductor cross-section rigid	0.2 mm² ... 2.5 mm² (with ferrule)
	0.14 mm² ... 2.5 mm² (without ferrule)
Conductor cross-section flexible	0.14 mm² ... 2.5 mm²
Conductor cross-section AWG	24 ... 12 (flexible)

Ex data

Ex installation (EPL)	Gc
	Div. 2

Interfaces

Data: IFS interface

Connection method	Micro USB type B

Signaling

Status display	Green LED (supply voltage)
	Yellow LED (switching output)
Error indication	Red LED

Dimensions

Width	6.2 mm
Height	109.81 mm
Depth	119.2 mm

Material specifications

Color	gray (RAL 7042)
Housing material	PBT
Fire protection for rail vehicles (DIN EN 45545-2) R22	HL 1 - HL 2
Fire protection for rail vehicles (DIN EN 45545-2) R23	HL 1 - HL 2
Fire protection for rail vehicles (DIN EN 45545-2) R24	HL 1 - HL 2

Environmental and real-life conditions

Ambient conditions

Degree of protection	IP20 (not assessed by UL)
Ambient temperature (operation)	-40 °C ... 70 °C
Ambient temperature (storage/transport)	-40 °C ... 85 °C
Altitude	≤ 2000 m
Permissible humidity (operation)	5 % ... 95 % (non-condensing)

Approvals

CE

Certificate	CE-compliant

ATEX

Identification	Ⓔx II 3 G Ex ec IIC T4 Gc
Certificate	BVS 20 ATEX E 024 X

IECEx

Identification	Ex ec IIC T4 Gc
Certificate	IECEx BVS 20.0017X

CCC / China-Ex

Identification	Ex nA IIC T4 Gc
Certificate	NEPSI GYJ21.1041X

UL, USA/Canada

Identification	UL 508 Listed
	Class I, Div. 2, Groups A, B, C, D T6
	Class I, Zone 2, Group IIC T6

Shipbuilding approval

Certificate	DNV GL TAA000021E Rev. 1

EAC Ex

Identification	EAC Ex Ex ec IIC T4 Gc
Certificate	BY/112 02.01 TP012 103.01 00081

Shipbuilding data

Temperature	B
Humidity	B
Vibration	A
EMC	A
Enclosure	Required protection according to the Rules shall be provided upon installation on board

EMC data

Electromagnetic compatibility	Conformance with EMC directive
Noise immunity	EN 61000-6-2
Note	When being exposed to interference, there may be minimal

	deviations.

Noise emission

Standards/regulations	EN 61000-6-4

Standards and regulations

Electrical isolation	3-way isolation

GB Standard

Standards/regulations	GB 3836.1
	GB 3836.8

Mounting

Mounting type	DIN rail mounting
Assembly note	The DIN rail connector can be used for bridging the supply voltage. It can be snapped onto a 35 mm EN 60715 DIN rail.
Mounting position	any

Drawings

Block diagram

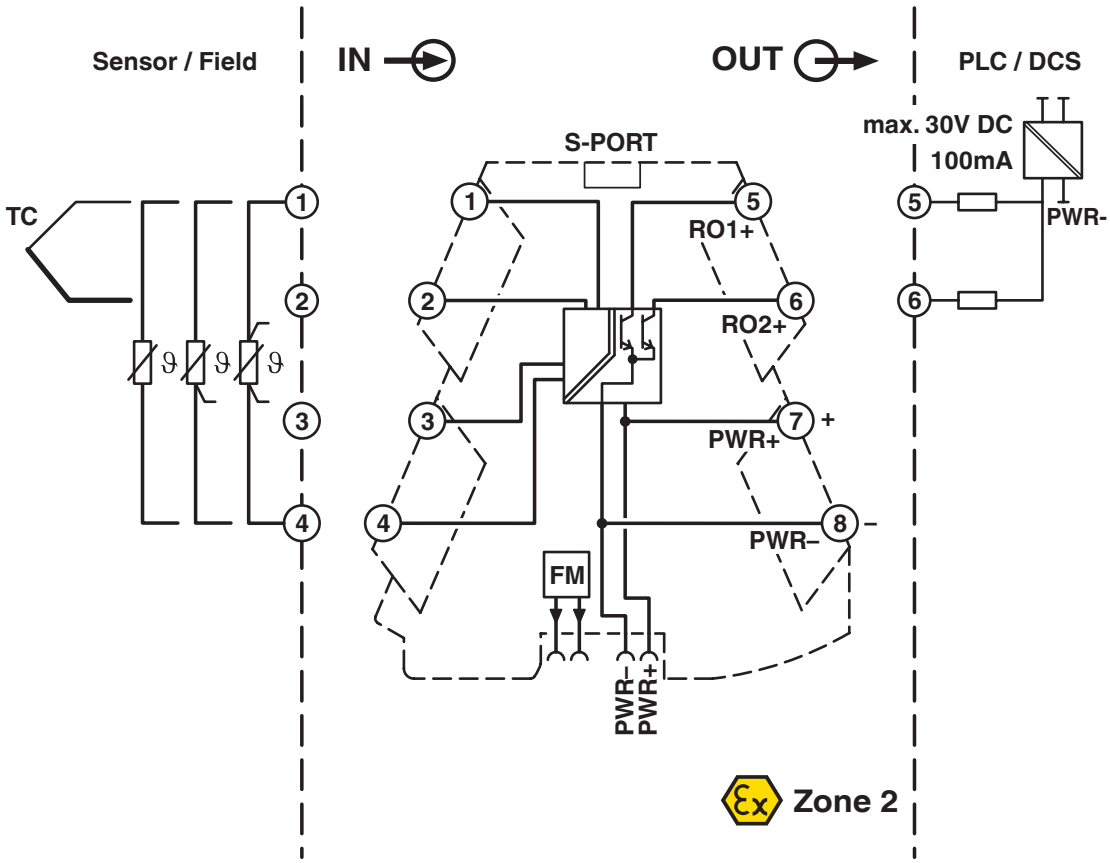

Approvals

To download certificates, visit the product detail page: https://www.phoenixcontact.com/us/products/2906877

UL Listed
Approval ID: FILE E 238705

cUL Listed
Approval ID: FILE E 238705

DNV
Approval ID: TAA000021E

IECEx
Approval ID: IECEx_BVS_20.0017X

cUL Listed
Approval ID: E196811

UL Listed
Approval ID: E196811

ATEX
Approval ID: BVS 20 ATEX E 024 X

CCC
Approval ID: 2022122304115970

Classifications

ECLASS

ECLASS-13.0	27210120
ECLASS-15.0	27210120

ETIM

ETIM 10.0	EC002653

UNSPSC

UNSPSC 21.0	39121000

Environmental product compliance

EU RoHS

Fulfills EU RoHS substance requirements	Yes
Exemption	7(a), 7(c)-I

China RoHS

Environment friendly use period (EFUP)	EFUP-50
	An article-related China RoHS declaration table can be found in the download area for the respective article under "Manufacturer declaration". For all articles with EFUP-E, no China RoHS declaration table issued and required.

EU REACH SVHC

REACH candidate substance (CAS No.)	Lead(CAS: 7439-92-1)
SCIP	58730bfc-bb49-41d4-ac8b-a46104fbacbb

Phoenix Contact 2026 © - all rights reserved
https://www.phoenixcontact.com

Phoenix Contact USA
586 Fulling Mill Road
Middletown, PA 17057, United States
(+717) 944-1300
info@phoenixcon.com