TTC-6-GDT-C-24AC-UT-I - Surge protection device

2906842

https://www.phoenixcontact.com/us/products/2906842

Please be informed that the data shown in this PDF document is generated from our online catalog. Please find the complete data in the user documentation. Our general terms of use for downloads are valid.





Coarse surge protection with integrated status indicator for a signal wire with grounded reference potential. Can be used in safety-related circuits up to SIL 3.

Your advantages

- Space-saving and cost-saving with a narrow overall width of just 6 mm
- Continuous monitoring of protective devices, plus mechanical status indicator with optional remote signaling
- Finding the right product for all possible requirements in MCR applications is easy, thanks to the complete range of products with customized features

ELEKTROGERÄTE RÜCKNAHME

Commercial data

Item number	2906842
Packing unit	1 pc
Minimum order quantity	1 pc
Sales key	CL23
Product key	CL2264
GTIN	4055626136981
Weight per piece (including packing)	27.7 g

Weight per piece (excluding packing)	23.13 g
Customs tariff number	85363010
Country of origin	DE

Technical data

Product properties

Product type	Surge protection for MCR technology
Product family	TERMITRAB complete
IEC test classification	C1
	C2
	C3
	D1
Type	DIN rail module, one-piece
Surge protection fault message	optical

Insulation characteristics

Overvoltage category	III
Pollution degree	2

Electrical properties

Nominal voltage U_N	24 V AC

Connection data

Connection method	Screw connection
Screw thread	M3
Tightening torque	0.5 Nm ... 0.6 Nm
Conductor cross-section flexible	0.2 mm² ... 2.5 mm²
Conductor cross-section rigid	0.2 mm² ... 4 mm²
Conductor cross-section AWG	24 ... 12

Dimensions

Dimensional drawing	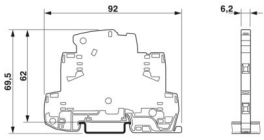
Width	6.2 mm
Height	92 mm
Depth	69.5 mm (incl. DIN rail 7.5 mm)

Material specifications

Color	gray (RAL 7042)
Flammability rating according to UL 94	V-0
Insulating material	PBT
Housing material	PBT

Mechanical properties

Mechanical data

Open side panel	Yes

Protective circuit

Direction of action	Line-Earth Ground
Nominal voltage U_N	24 V AC
Maximum continuous operating voltage U_C	28 V DC
	36 V AC
Rated current	1 A DC (60 °C)
	2 A AC (60 °C)
Operating effective current I_C at U_C	≤ 1 µA
Protective conductor current I_{PE}	≤ 1 µA
Nominal discharge current I_n (8/20) µs (line-ground)	5 kA
Pulse discharge current I_{imp} (10/350) µs (line-earth)	0.5 kA
Voltage protection level U_p (line-earth)	≤ 800 V (C1 - 2 kV)
	≤ 1 kV (C2 - 10 kV)
	≤ 800 V (C3 - 25 A)
	≤ 900 V (C3 - 100 A)
Response time t_A (line-earth)	≤ 100 ns
Input attenuation aE, asym.	typ. 0.3 dB (≤ 8 MHz/150 Ω)
	typ. 0.3 dB (≤ 30 MHz/50 Ω)
Cut-off frequency fg (3 dB), asym. (PE) in 50 Ω system	typ. 130 MHz
Cut-off frequency fg (3 dB), asym. (PE) in 150 Ω system	typ. 25 MHz
Capacity (Core-Earth)	5 pF
Resistance per path	≤ 100 mΩ
Surge protection fault message	optical
Impulse durability (line-earth)	C1 - 1 kA
	C2 - 5 kA
	C3 - 100 A
	D1 - 500 A
Pulse reset time (line-earth)	≤ 1 ms

Environmental and real-life conditions

Ambient conditions

Degree of protection	IP20 (with end cover)
Ambient temperature (operation)	-40 °C ... 85 °C
Ambient temperature (storage/transport)	-40 °C ... 85 °C
Altitude	≤ 4000 m (amsl)
Permissible humidity (operation)	5 % ... 95 %

Standards and regulations

Standards/specifications	IEC 61643-21
Note	2000 + corrigendum 2001 + A1:2008, modified + A2:2012

EN 61643-21

Standards/specifications	EN 61643-21
Note	2001 + A1:2009 + A2:2013

Mounting

Mounting type	DIN rail: 35 mm

Drawings

Dimensional drawing

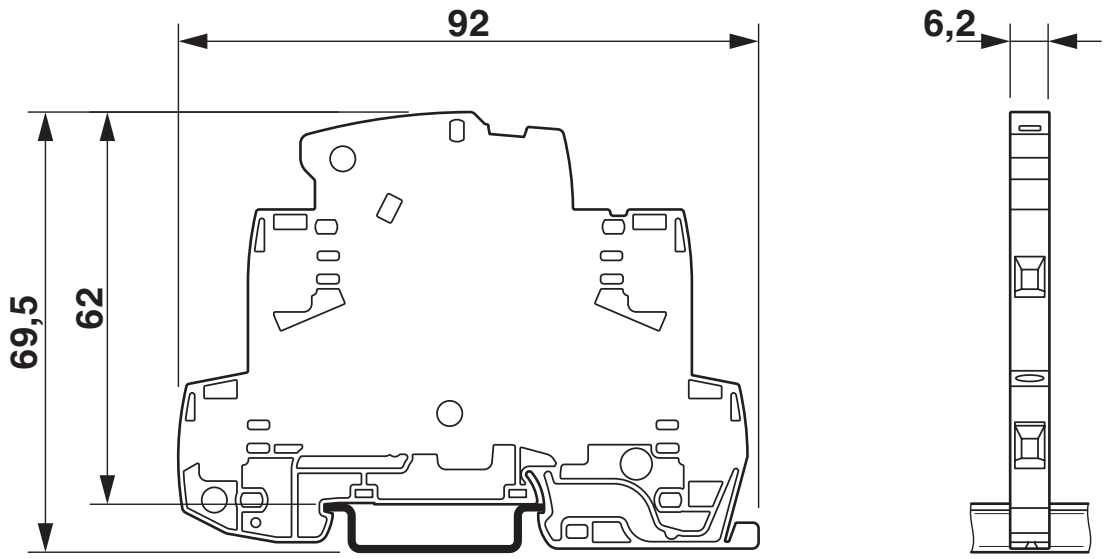

Schematic diagram

TTC-6-TVSD									
Category	1oo1 architecture, HFT=0				1oo2 architecture, HFT=1				
	PFD_{AVG}	PFH	Used budget of SIL 2 SIF		PFD_{AVG}	PFH	CCF	Used budget of SIL 3 SIF	
			PFD_{AVG}	PFH				PFD_{AVG}	PFH
	$5.62_{x10^{-7}}$	$1.00_{x10^{-10}}$ 1/h	0.0 %	0.0 %	$2.81_{x10^{-8}}$	$5.00_{x10^{-12}}$ 1/h	5 %	0.0 %	0.0 %
					$5.62_{x10^{-8}}$	$1.00_{x10^{-11}}$ 1/h	10 %	0.0 %	0.0 %
	Calculation based on exida report, Phoenix Contact 16/06-072 R024 V2R0 exida Profile 1, FMEDA Analysis 2, T_{proof}: 1 year, MT: 10 years, MTTR: 24 hours, PTC: 99% Used standards IEC/EN 61508, edition 2010 (device specific) IEC/EN 61511, edition 2016 + COR1:2016 + A1:2017 (system specific)								

Functional safety scenarios
Table also applies to the TTC-6-GDT item group

Diagram

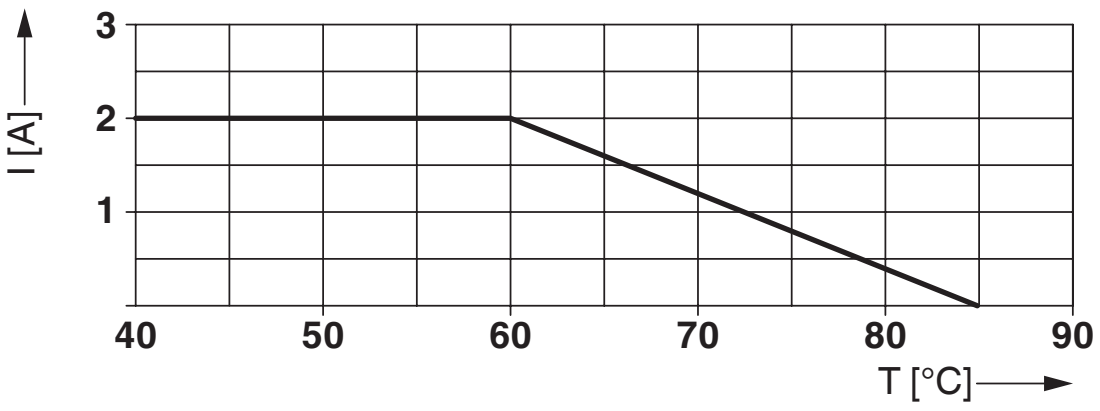

Circuit diagram

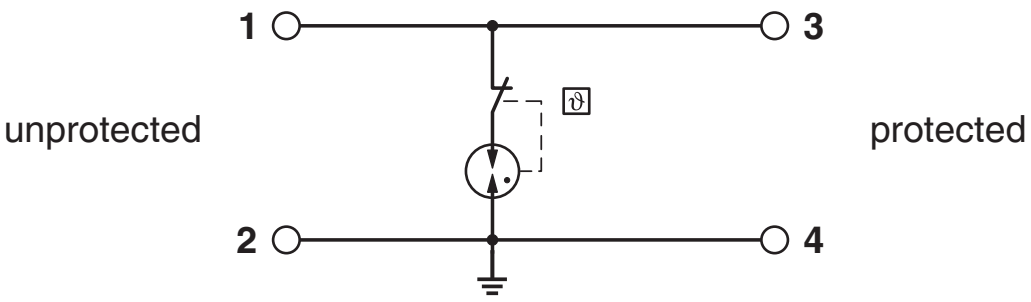

Approvals

To download certificates, visit the product detail page: https://www.phoenixcontact.com/us/products/2906842

CSA
Approval ID: 70136717

DNV GL
Approval ID: TAE000027G

UL Listed
Approval ID: FILE E 138168

CSAus
Approval ID: 70136717

UAE-RoHS
Approval ID: 22-06-16192

Functional Safety
Approval ID: 16-06-072 R024 V2R0

Classifications

ECLASS

ECLASS-13.0	27171501
ECLASS-15.0	27171501

ETIM

ETIM 10.0	EC001466

UNSPSC

UNSPSC 21.0	39121600

Environmental product compliance

EU RoHS

Fulfills EU RoHS substance requirements	Yes, No exemptions

China RoHS

Environment friendly use period (EFUP)	EFUP-E
	No hazardous substances above the limits

EU REACH SVHC

REACH candidate substance (CAS No.)	No substance above 0.1 wt%

EF3.1 Climate Change

CO2e kg	41.659 kg CO2e

Phoenix Contact 2026 © - all rights reserved
https://www.phoenixcontact.com

Phoenix Contact USA
586 Fulling Mill Road
Middletown, PA 17057, United States
(+717) 944-1300
info@phoenixcon.com