TTC-6P-3-HF-F-M-EX-24DC-UT-I - Surge protection device

2906828

https://www.phoenixcontact.com/us/products/2906828

Please be informed that the data shown in this PDF document is generated from our online catalog. Please find the complete data in the user documentation. Our general terms of use for downloads are valid.



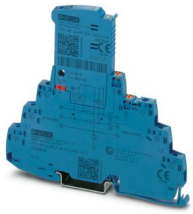

Surge protection with integrated status indicator and knife disconnection for a 3-wire Ex i signal circuit with common reference potential. For HF applications. Indirect grounding via gas discharge tube, HART-compatible. Suitable for use in the fieldbus system (e.g., PROFIBUS PA) in accordance with the FISCO concept. Can be used in safety-related circuits up to SIL 3.

Your advantages

- Space-saving and cost-saving with a narrow overall width of just 6 mm
- Continuous monitoring of protective devices, plus mechanical status indicator with optional remote signaling
- Finding the right product for all possible requirements in MCR applications is easy, thanks to the complete range of products with customized features
- Easy testing and documentation with CHECKMASTER 2 with pluggable protective modules
- The signal is not influenced during maintenance work, thanks to the impedance-neutral insertion and removal of protective plugs

Commercial data

Item number	2906828
Packing unit	1 pc
Minimum order quantity	1 pc
Sales key	CL23
Product key	CL2163
GTIN	4055626135892
Weight per piece (including packing)	67.3 g
Weight per piece (excluding packing)	42.78 g
Customs tariff number	85363010
Country of origin	DE

Technical data

Product properties

Product type	Surge protection for information technology
Product family	TERMITRAB complete
IEC test classification	C1
	C2
	C3
	D1
Type	DIN rail module, two-section, divisible

Insulation characteristics

Overvoltage category	III
Pollution degree	2

Electrical properties

Nominal voltage U_N	24 V DC

Connection data

Connection method	Screw connection
Screw thread	M3
Tightening torque	0.5 Nm ... 0.6 Nm
Conductor cross-section flexible	0.2 mm² ... 2.5 mm²
Conductor cross-section rigid	0.2 mm² ... 4 mm²
Conductor cross-section AWG	24 ... 12

Ex data

Maximum inner capacitance C_i	negligible
Max. internal inductance L_i	negligible
Max. input current I_i	400 mA (T4 / -40 °C ... +50 °C)
	250 mA (T4 / -40 °C ... +70 °C)
	350 mA (T6 / -40 °C ... +35 °C)
	100 mA (T6 / -40 °C ... +70 °C)
	400 mA (CCC: Ex ic [ia Ga] IIC T4 Gc / -40 °C ... +70 °C)
Max. input voltage U_i	30 V DC
Insulation voltage to ground	> 180 V DC
Ambient temperature (operation)	-40 °C ... 70 °C (with current derating)

Dimensions

Dimensional drawing	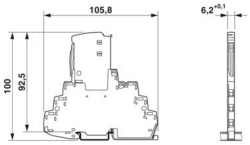

Width	6.2 mm +0.1 mm
Height	105.8 mm
Depth	100 mm (incl. DIN rail 7.5 mm)

Material specifications

Color	blue (RAL 5015)
Flammability rating according to UL 94	V-0
Insulating material	PBT
Housing material	PBT

Mechanical properties

Mechanical data

Open side panel	No

Protective circuit

Direction of action	Line-Line & Line-Signal Ground/Shield & optional Signal Ground/Shield-Earth Ground
Nominal voltage U_N	24 V DC
Maximum continuous operating voltage U_C	30 V DC
Rated current	600 mA (40 °C)
Operating effective current I_C at U_C	≤ 5 µA
Protective conductor current I_{PE}	≤ 1 µA
Nominal discharge current I_n (8/20) µs (line-line)	5 kA
Nominal discharge current I_n (8/20) µs (line-ground)	5 kA
Pulse discharge current I_{imp} (10/350) µs (line-line)	0.5 kA
Pulse discharge current I_{imp} (10/350) µs (line-earth)	0.5 kA
Total discharge current I_{Total} (8/20) µs	10 kA
Output voltage limitation at 1 kV/µs (wire-wire)	≤ 45 V
Voltage protection level U_p (line-line)	≤ 150 V (C1 - 1 kV / 500 A)
	≤ 275 V (C2 - 10 kV / 5 kA)
	≤ 55 V (C3 - 100 A)
Voltage protection level U_p (line-earth)	≤ 750 V (C1 - 1 kV / 500 A)
	≤ 750 V (C2 - 10 kV / 5 kA)
	≤ 1.2 kV (C3 - 100 A)
Voltage protection level U_p static (line-line)	≤ 75 V (C1 - 1 kV / 500 A)
	≤ 120 V (C2 - 10 kV / 5 kA)
Voltage protection level U_p static (line-earth)	≤ 750 V (C1 - 1 kV / 500 A)
	≤ 750 V (C2 - 10 kV / 5 kA)
Response time t_A (line-line)	≤ 1 ns
Response time t_A (line-earth)	≤ 100 ns
Input attenuation aE, sym.	typ. 0.3 dB (≤ 8.7 MHz/150 Ω)
Input attenuation aE, asym.	typ. 0.3 dB (≤ 10.5 MHz/150 Ω)
Cut-off frequency fg (3 dB), sym. in 150 Ω system	typ. 60 MHz
Capacity (Core-Core)	typ. 32 pF

Resistance per path	1.65 Ω ±20 %
Surge protection fault message	optical
Max. required back-up fuse	630 mA (FF)
Impulse durability (line-line)	C1 - 1 kV / 500 A
	C2 - 10 kV / 5 kA
	C3 - 100 A
Impulse durability (line-earth)	C1 - 1 kV / 500 A
	C2 - 10 kV / 5 kA
	C3 - 100 A
	D1 - 500 A
Pulse reset time (line-line)	≤ 600 ms
Pulse reset time (line-earth)	≤ 30 ms

Environmental and real-life conditions

Ambient conditions

Degree of protection	IP20
Ambient temperature (operation)	-40 °C ... 85 °C
Ambient temperature (storage/transport)	-40 °C ... 85 °C
Altitude	≤ 2000 m (amsl)
Permissible humidity (operation)	5 % ... 95 %

Approvals

Conformity/Approvals

UL, USA / Canada	Class I, Div. 2, Groups A, B, C, D T4A

Standards and regulations

Standards/specifications	EN 60079-0
Note	2018
Standards/specifications	EN 60079-11
Note	2012

EN 61643-21

Standards/specifications	EN 61643-21
Note	2001 + A1:2009 + A2:2013
Standards/specifications	IEC 60079-0
Note	2017
Standards/specifications	IEC 60079-11
Note	2008
Standards/specifications	IEC 61643-21
Note	2000 + corrigendum 2001 + A1:2008, modified + A2:2012

Mounting

Mounting type	DIN rail: TH 35 - 7.5 mm

Drawings

Dimensional drawing

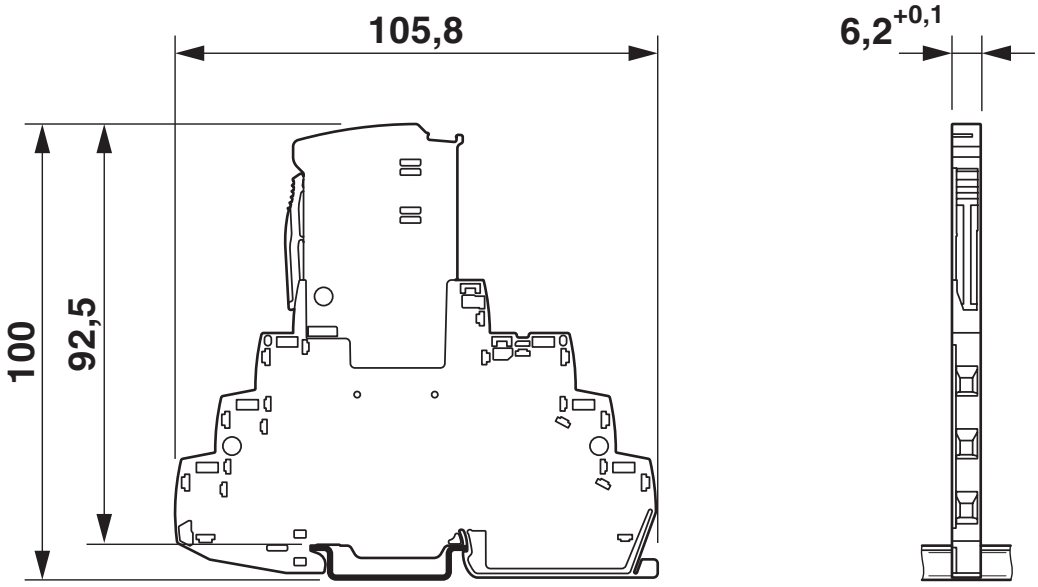

Schematic diagram

TTC-6P-3-HF-F-M-EX-...-I									
Category	1oo1 architecture, HFT=0				1oo2 architecture, HFT=1				
	PFD_{AVG}	PFH	Used budget of SIL 2 SIF		PFD_{AVG}	PFH	CCF	Used budget of SIL 3 SIF	
			PFD_{AVG}	PFH				PFD_{AVG}	PFH
	$3.32_{x10^{-5}}$	$5.90_{x10^{-9}}$ 1/h	0.3 %	0.6 %	$1.66_{x10^{-6}}$	$2.95_{x10^{-10}}$ 1/h	5 %	0.2 %	0.3 %
					$3.32_{x10^{-6}}$	$5.90_{x10^{-10}}$ 1/h	10 %	0.3 %	0.6 %
	Calculation based on exida report, Phoenix Contact 16/06-072 R022 V4R2 exida Profile 1, FMEDA Analysis 2, T_{proof}: 1 year, MT: 10 years, MTTR: 24 hours, PTC: 99% Used standards IEC/EN 61508, edition 2010 (device specific) IEC/EN 61511, edition 2016 + COR1:2016 + A1:2017 (system specific)								

Functional safety scenarios

Diagram

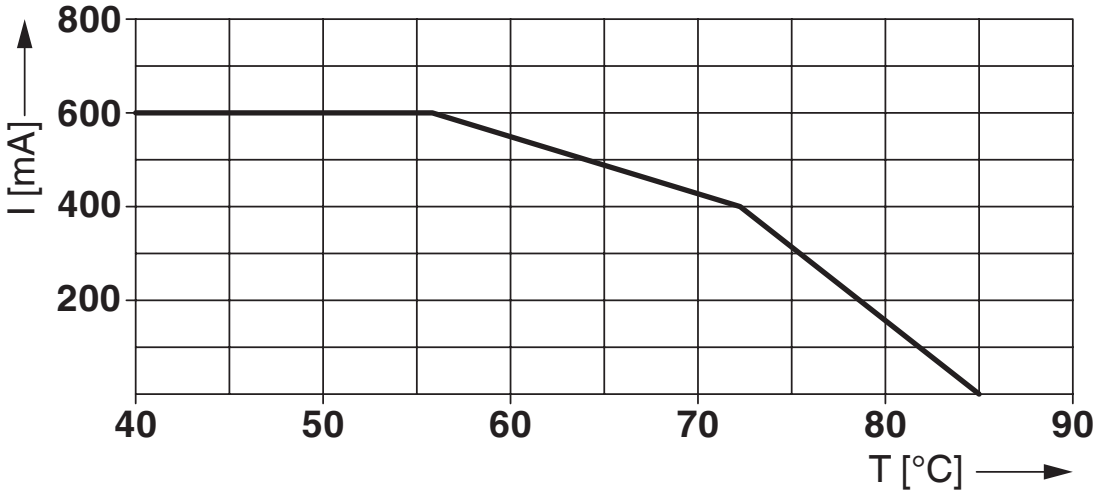

Derating for non-Ex applications

Circuit diagram

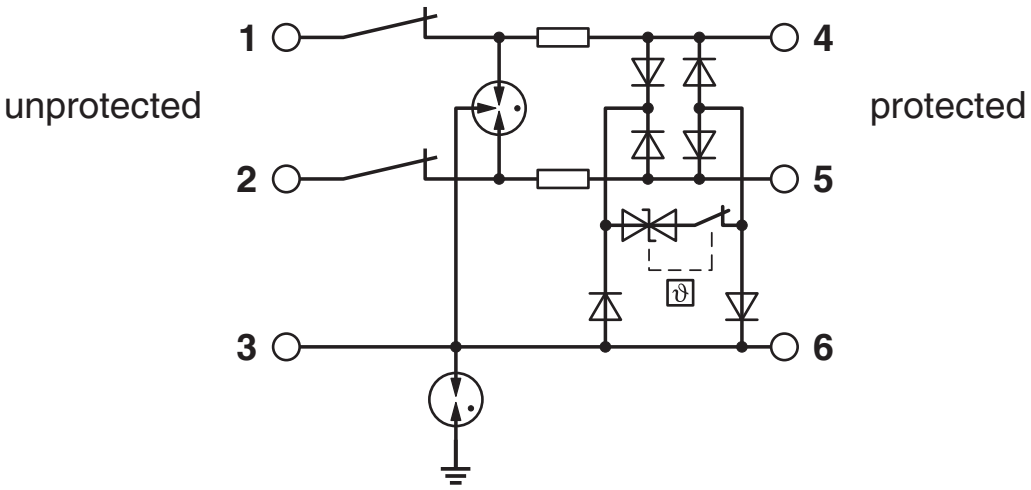

Approvals

To download certificates, visit the product detail page: https://www.phoenixcontact.com/us/products/2906828

CSA
Approval ID: 70136717

DNV GL
Approval ID: TAE000027G

UL Listed
Approval ID: FILE E 138168

CSAus
Approval ID: 70136717

UAE-RoHS
Approval ID: 22-06-16783

Functional Safety
Approval ID: 16-06-072 R022 V4R3

cUL Listed
Approval ID: FILE E 333250

INMETRO
Approval ID: 19.0077 X

NEPSI-EX
Approval ID: GYJ20.1114X

CCC
Approval ID: 2020322316000780

UKCA-EX
Approval ID: DEKRA 23UKEX0110X

cULus Listed
Approval ID: File E 333250

IECEx
Approval ID: IECEx BVS 16.0090X

ATEX
Approval ID: BVS 16 ATEX E 125 X

Classifications

ECLASS

ECLASS-13.0	27171502
ECLASS-15.0	27171502

ETIM

ETIM 10.0	EC001466

UNSPSC

UNSPSC 21.0	39121600

Environmental product compliance

EU RoHS

Fulfills EU RoHS substance requirements	Yes
Exemption	7(a), 7(c)-I

China RoHS

Environment friendly use period (EFUP)	EFUP-50
	An article-related China RoHS declaration table can be found in the download area for the respective article under "Manufacturer declaration". For all articles with EFUP-E, no China RoHS declaration table issued and required.

EU REACH SVHC

REACH candidate substance (CAS No.)	Lead(CAS: 7439-92-1)
SCIP	965ceab5-cae3-42db-890d-3b0655340107

EF3.1 Climate Change

CO2e kg	1.557 kg CO2e

Phoenix Contact 2026 © - all rights reserved
https://www.phoenixcontact.com

Phoenix Contact USA
586 Fulling Mill Road
Middletown, PA 17057, United States
(+717) 944-1300
info@phoenixcon.com