VIP/S/MC/BASE 9-16/L/EX - Base module

2906630

https://www.phoenixcontact.com/us/products/2906630

Please be informed that the data shown in this PDF document is generated from our online catalog. Please find the complete data in the user documentation. Our general terms of use for downloads are valid.



8-channel VIP I/O marshalling base element for universal use. All connections as screw connection technology. With the COMBICON connector, compatible with the Honeywell C300 and RUSIO series. Marking for channels 9–16.

Your advantages

- Integrated carrier for IOA insertion and retention
- Screw-clamp field connections
- Two isolated power bus options
- Channels for marking accessories
- Integrated DIN rail ground foot
- Rugged metal DIN rail foot for ease of installation or removal from the rail
- Each channel has four connections (A, B, C, D) and multiple shield options
- Terminals for discrete wiring or cable connection

Commercial data

Item number	2906630
Packing unit	1 pc
Minimum order quantity	1 pc
Note	Made to order (non-returnable)
Sales key	C480
Product key	DK115A
GTIN	4055626184623
Weight per piece (including packing)	444.2 g
Weight per piece (excluding packing)	414.6 g
Customs tariff number	85366990
Country of origin	US

Technical data

Product properties

Product type	Module carrier
Product family	VIP I/O-Marshalling
No. of channels	8

Electrical properties

Max. operating voltage U_{max}	30 V DC (P2 and field terminals)
	230 V AC (P2 and field terminals)
	30 V DC (P1 terminals)
	30 V (X30 and X31 connectors)
Max. permissible current	15 A (P1 or P2 terminals)
Max. permissible total current	15 A (per module)
Max. current carrying capacity per branch	3 A (field signal)
	1 A (control contacts)

Connection data

Field level

Connection in acc. with standard	IEC / EN
Connection method	Screw connection
Stripping length	8 mm
Screw thread	M3
Conductor cross-section rigid	0.2 mm² ... 4 mm²
Conductor cross-section flexible	0.2 mm² ... 2.5 mm²
Conductor cross-section AWG	24 ... 12
Tightening torque	0.5 Nm ... 0.6 Nm

Controller level

Connection method	Pluggable screw connection
Number of connections	2
Number of positions	9

Ex data

Safety data

Input voltage U_i	30 V (per channel)
Input current I_i	1 A (per channel)
Inductance Li	0 mH
Capacitance Ci	0 µF

Signaling

Status display	no
Status display present	no

Dimensions

Item dimensions

Width	118.1 mm
Height	102.7 mm
Depth	72.2 mm

Material specifications

Color	gray (RAL 7042)

Environmental and real-life conditions

Ambient conditions

Degree of protection	IP20
Ambient temperature (operation)	-40 °C ... 75 °C
Ambient temperature (storage/transport)	-40 °C ... 75 °C
Permissible humidity (operation)	0 % ... 95 % (non-condensing)

Approvals

ATEX

Identification	Ex II 3G
	Ex nA ic IIC T4 Gc
	Ex II 3G Ex nA ic IIC T4 Gc
	Ex II 3(3)G Ex nA [ic] IIC T4 Gc
	Ex II (3)D [Ex ic Dc] IIIC
Certificate	Sira 16ATEX4260X

IECEx

Identification	Ex nA IIC T4 Gc
	Ex nA ic IIC T4 Gc
	Ex nA [ic] IIC T4 Gc
	[Ex ic Dc] IIIC
	Ex nA [ia Ga] IIC T4 Gc
	[Ex ia Da] IIIC
Certificate	IECEx SIR 16.0088X

FM

Identification	FM 3600
	FM 3611
	FM 3810
	Class I, Zone 2, AEx nA ic IIC T4 Gc
	AEx nA IIC T4 Gc
	Nonincendive: Class I, Div. 2, Groups A, B, C, D T4
	With connection to Class I, II, and III, Div. 2, Groups A, B, C, D, E, F, G

CSA, Canada

Identification	Ex nA ic IIC T4 Gc
	Ex nA IIC T4 Gc
	Nonincendive: Class I, Div. 2, Groups A, B, C, D T4
	With connection to Class I, II, and III, Div. 2, Groups A, B, C, D, E, F, G

ANSI/ISA

Identification	ANSI/ISA 60079-0
	ANSI/ISA 60079-11
	ANSI/ISA 60079-15

ANSI/IEC

Identification	ANSI/IEC 60529

Corrosive gas test

Identification	ISA S71.04.2013 G3 Harsh Group A

Ex data

ATEX	Sira 16ATEX4260X; Ex II 3G Ex nA ic IIC T4 Gc; Ex II 3G Ex nA ic IIC T4 Gc Ex II 3(3)G Ex nA [ic] IIC T4 Gc; Ex II (3)D [Ex ic Dc] IIIC
IECEx	IECEx SIR 16.0088X Ex nA IIC T4 Gc; Ex nA ic IIC T4 Gc; Ex nA [ic] IIC T4 Gc; [Ex ic Dc] IIIC Ex nA [ia Ga] IIC T4 Gc; [Ex ia Da] IIIC
FM approval	Class I, Zone 2, AEx nA ic IIC T4 Gc; AEx nA IIC T4 Gc Nonincendive: Class I, Div. 2, Groups A, B, C, D T4 With connection to Class I, II, and III, Div. 2, Groups A, B, C, D, E, F, G

Standards and regulations

Standards/regulations	IEC 60664
	DIN EN 50178

Mounting

Mounting type	DIN rail mounting
Mounting position	As desired on 35 mm DIN rail in acc. with EN 60715

Drawings

Dimensional drawing

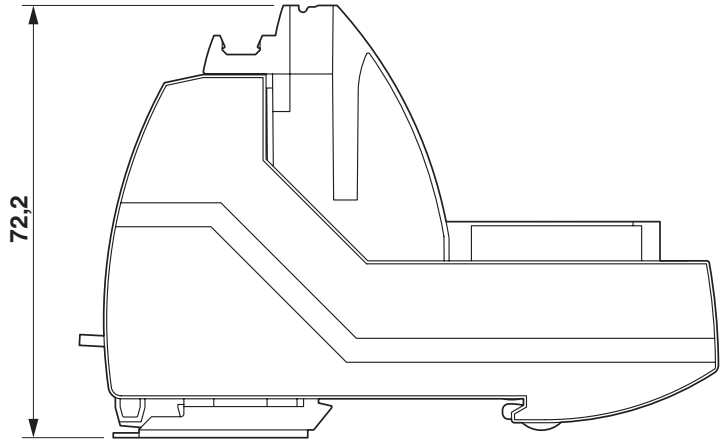

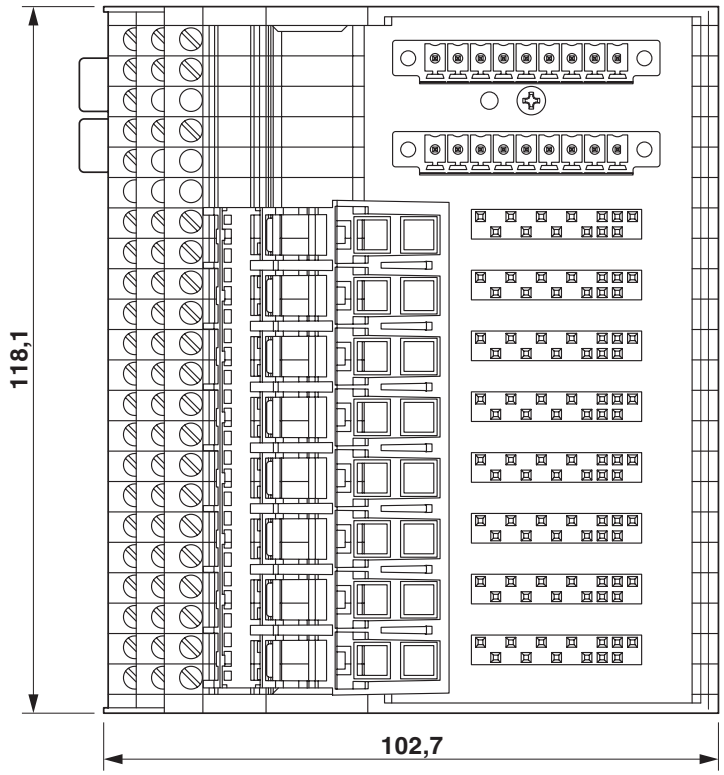

Circuit diagram

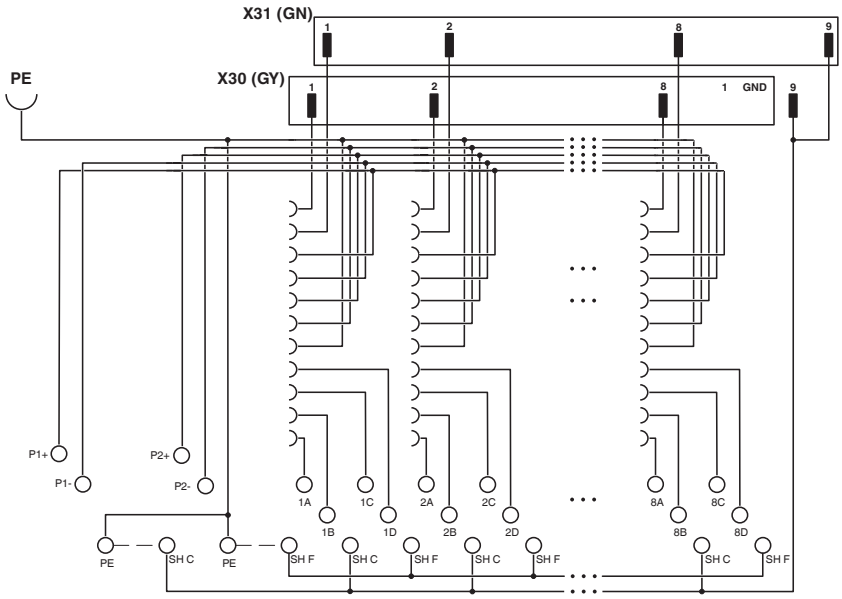

Approvals

To download certificates, visit the product detail page: https://www.phoenixcontact.com/us/products/2906630

Functional Safety
Approval ID: PHO 1609035 C001

IECEx
Approval ID: IECEx SIR 16.0088X

CSA
Approval ID: 2431647

FM approved
Approval ID: FM 16USUS0155X

CSAus
Approval ID: 2431647

ATEX
Approval ID: Sira 16ATEX4260X

Classifications

ECLASS

ECLASS-13.0	27141152
ECLASS-15.0	27141152

ETIM

ETIM 10.0	EC002780

UNSPSC

UNSPSC 21.0	39121400

Environmental product compliance

EU RoHS

Fulfills EU RoHS substance requirements	Yes, No exemptions

China RoHS

Environment friendly use period (EFUP)	EFUP-50
	An article-related China RoHS declaration table can be found in the download area for the respective article under "Manufacturer declaration". For all articles with EFUP-E, no China RoHS declaration table issued and required.

EU REACH SVHC

REACH candidate substance (CAS No.)	No substance above 0.1 wt%

Phoenix Contact 2026 © - all rights reserved
https://www.phoenixcontact.com

Phoenix Contact USA
586 Fulling Mill Road
Middletown, PA 17057, United States
(+717) 944-1300
info@phoenixcon.com