PACT MCR-V2-4012-70-200-1A-1 - Current transformer

2905879

https://www.phoenixcontact.com/us/products/2905879

Please be informed that the data shown in this PDF document is generated from our online catalog. Please find the complete data in the user documentation. Our general terms of use for downloads are valid.



Window-type current transformer, 200 A AC primary current; 1 A AC secondary current; accuracy class 1; 5 VA rated power

Product description

Our PACT current transformers for new installations offer a complete portfolio for converting alternating currents up to 4000 A AC. PACT current transformers are available as bus-bar, window-type, and winding current transformers with a range of different transformation ratios, accuracy classes, and rated powers suitable for your current measurement tasks.

Your advantages

- Protection against destruction: short-circuiting of the transformer by rotating the terminal cover 90°
- Variable mounting with flexible mounting options
- Detect peak loads reliably with a thermal nominal continuous current that is 120% of the primary rated current
- Increased electrical safety with high rated insulation voltages
- Space-saving design with consistently narrow housing widths of 30 mm

Commercial data

Item number	2905879
Packing unit	1 pc
Minimum order quantity	1 pc
Sales key	C444
Product key	CMMA11
GTIN	4055626004853
Weight per piece (including packing)	392.7 g
Weight per piece (excluding packing)	250 g
Customs tariff number	85043129
Country of origin	DE

Technical data

Product properties

Product type	Current transformer
Product family	Window-type current transformer

Electrical properties

Rated insulation voltage	1 kV (Phase/neutral conductor)

General

Can be calibrated	no
Converter type	Window-type current transformer

Input data

Current transformer

Rated power	5 VA
Thermal rated short-time current	I_{th} = 60 * I_n
Thermal rated continuous current	I_d = 1.2 * I_n
Rated surge current	I_{dyn} = 2.5 * I_{th}
Rated frequency f_n	50 Hz
	60 Hz
Primary rated current I_{pn}	0 A AC ... 200 A AC
Can be calibrated	no
Converter type	Window-type current transformer

Output data

Signal

Designation	Current output
Secondary rated current I_{sn}	1 A AC
Surge current limitation factor	FS 5
Accuracy class	1

Connection data

Connection method	Screw connection
Stripping length	10 mm
Conductor cross-section flexible	1.5 mm² ... 10 mm² (per secondary terminal)
Tightening torque	2 Nm ... 2 Nm

Dimensions

Item dimensions

Width	31 mm
Height	92 mm
Depth	70 mm

Item dimensions with alternative mounting

Width	70 mm
Height	92 mm
Depth	31 mm

Copper rail

Width	40 mm
Height	12 mm

Copper rail 2

Width	30 mm
Height	10 mm

Circular conductor

Diameter	33 mm

Drill hole

Diameter	6.5 mm

Material specifications

Color	gray (RAL 7042)
Flammability rating according to UL 94	V0 (Housing)
Housing material	PA 6.6

Environmental and real-life conditions

Ambient conditions

Ambient temperature (operation)	-25 °C ... 40 °C
Ambient temperature (storage/transport)	-25 °C ... 40 °C
Altitude	≤ 1000 m
Permissible humidity (operation)	Use only indoors, non-condensing
Insulating material class	H

Approvals

CE

Certificate	CE-compliant

UKCA

Certificate	UKCA-compliant

UL, USA/Canada

Identification	XODW8.E323953

Standards and regulations

Standards/regulations	EN 61869

Mounting

Mounting type	DIN rail mounting
	Panel mounting

Drawings

Dimensional drawing

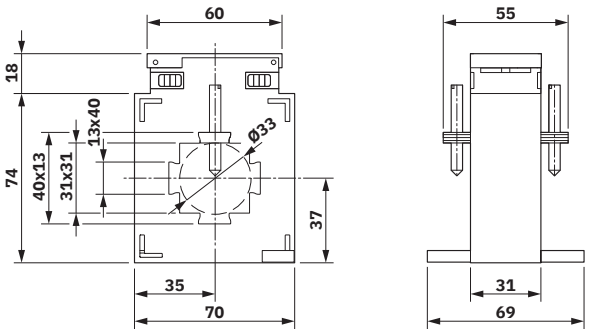

Approvals

To download certificates, visit the product detail page: https://www.phoenixcontact.com/us/products/2905879

cULus Recognized
Approval ID: E323953

Classifications

ECLASS

ECLASS-13.0	27210902
ECLASS-15.0	27210902

ETIM

ETIM 10.0	EC002048

UNSPSC

UNSPSC 21.0	39121000

Environmental product compliance

EU RoHS

Fulfills EU RoHS substance requirements	Yes, No exemptions

China RoHS

Environment friendly use period (EFUP)	EFUP-E
	No hazardous substances above the limits

EU REACH SVHC

REACH candidate substance (CAS No.)	No substance above 0.1 wt%

EF3.1 Climate Change

CO2e kg	3.847 kg CO2e

Phoenix Contact 2026 © - all rights reserved
https://www.phoenixcontact.com

Phoenix Contact USA
586 Fulling Mill Road
Middletown, PA 17057, United States
(+717) 944-1300
info@phoenixcon.com