UM-D37M/DS/FU/DI120V/C300/L IM - Termination board

2905867

https://www.phoenixcontact.com/us/products/2905867

Please be informed that the data shown in this PDF document is generated from our online catalog. Please find the complete data in the user documentation. Our general terms of use for downloads are valid.



VARIOFACE 16-channel module intended for use with Honeywell Experion C300 high-voltage digital IOTA: CX-TDI110 & CX-TDI120. Left side version.

Your advantages

- These VARIOFACE modules are used in combination with the relevant front adapters
- UM-PRO housing
- Designed to be mounted on the left side of the cabinet
- DIN rail mounting
- LED blown fusing indication
- Per channel disconnects with test points
- Per channel pluggable 800 mA fusing
- Per channel selectable intermarshalling or externally powered

Commercial data

Item number	2905867
Packing unit	1 pc
Minimum order quantity	1 pc
Note	Made to order (non-returnable)
Sales key	C421
Product key	DK218H
GTIN	4055626081212
Weight per piece (including packing)	462 g
Weight per piece (excluding packing)	440 g
Customs tariff number	85371098
Country of origin	US

Technical data

Product properties

Product type	Interface module
No. of channels	16

Insulation characteristics

Overvoltage category	II
Pollution degree	2

Electrical properties

Supported controller: HONEYWELL Experion PKS C300/C-Series

Suitable I/O card	TDI110 (non-redundant)
	TDI120 (redundant)

Connection data

Field level

Connection method	Screw connection with disconnect knife
Stripping length	8 mm
Screw thread	M 3
Conductor cross-section rigid	0.2 mm² ... 4 mm²
Conductor cross-section flexible	0.2 mm² ... 2.5 mm²
Conductor cross-section AWG	24 ... 12

Controller level

Connection method	D-SUB pin strip
Number of connections	1
Number of positions	37

Signaling

Status display present	yes, if the fuse fails

Dimensions

Item dimensions

Width	120 mm
Height	142.3 mm
Depth	66.8 mm

Environmental and real-life conditions

Ambient conditions

Ambient temperature (operation)	-40 °C ... 70 °C
Ambient temperature (storage/transport)	-40 °C ... 75 °C
Altitude	< 2000 m

Permissible humidity (operation)	< 90 %
Permissible humidity (storage/transport)	< 90 %

Standards and regulations

Standards/regulations	DIN EN 50178

Mounting

Mounting type	DIN rail mounting

Notes

Notes on operation	For proper use, the specifications of the installation directive (see Downloads) must be observed. For applications or use with third-party products, the specifications, and the safety and warning instructions of the respective third-party manufacturer must also be met.

UM-D37M/DS/FU/DI120V/C300/L IM - Termination board

2905867

https://www.phoenixcontact.com/us/products/2905867

Drawings

Dimensional drawing

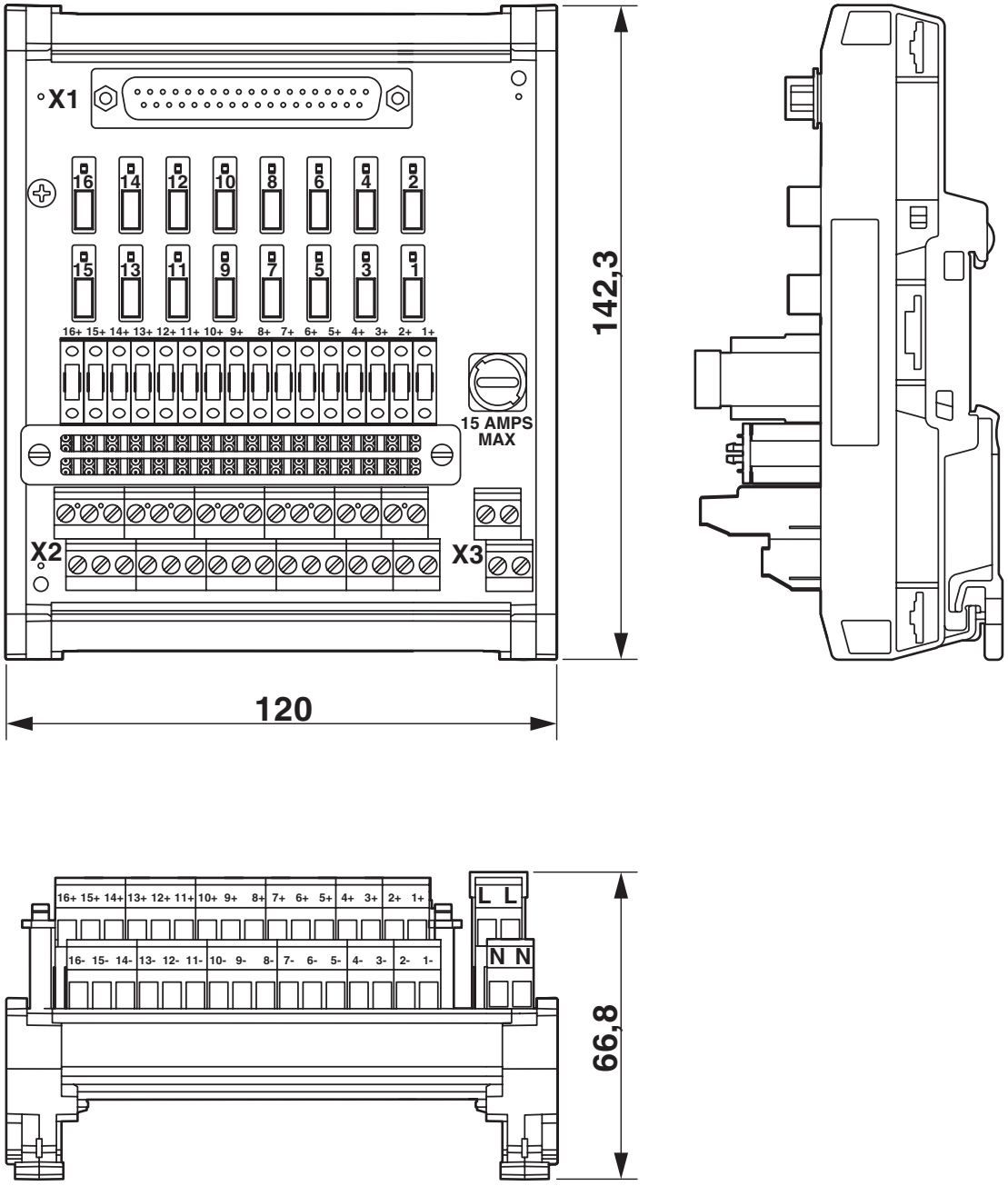

Circuit diagram

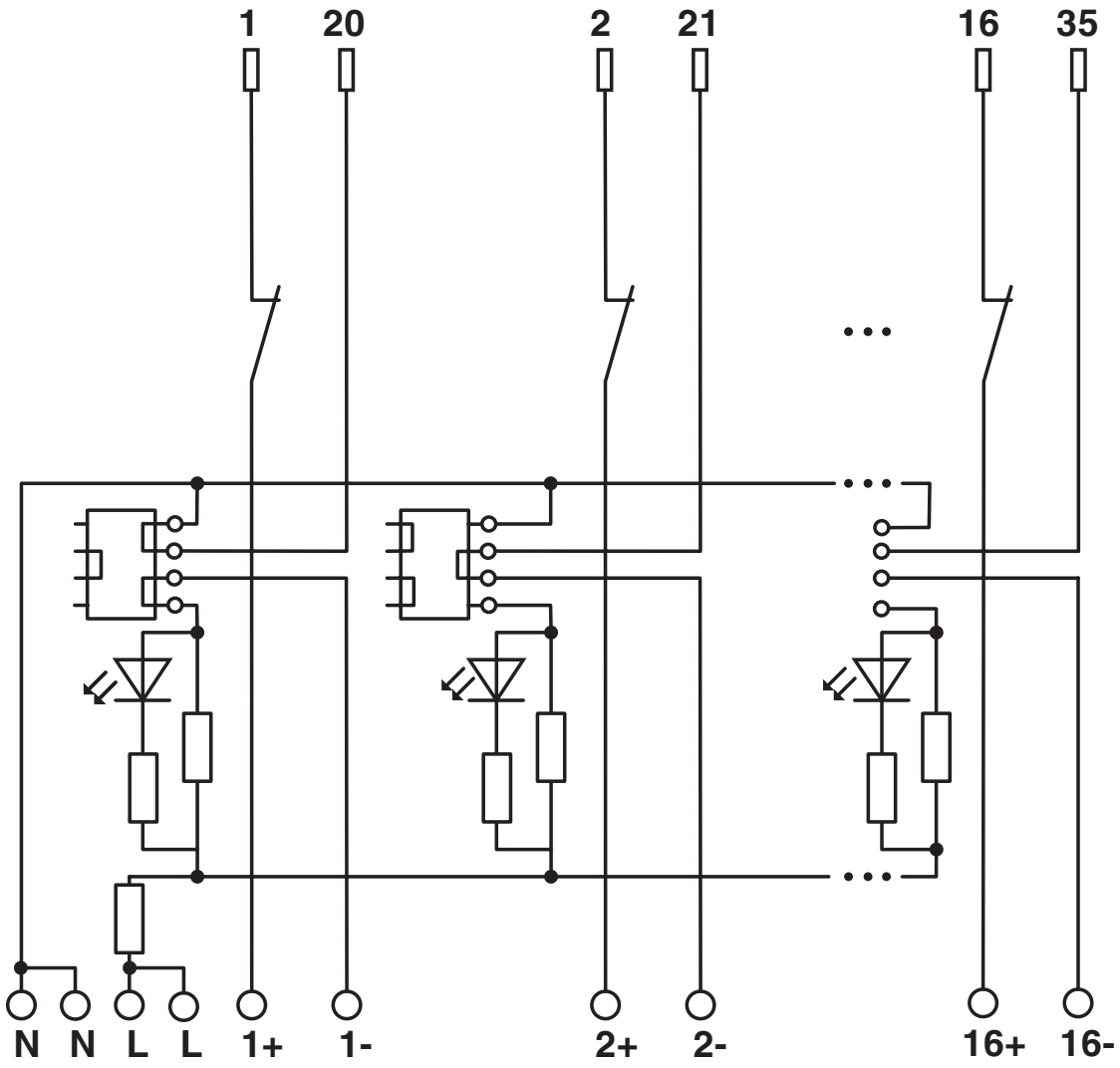

Channel 1 shows jumper in internal marshalling powered configuration.
Channel 2 shows jumper in externally powered configuration.

Classifications

ECLASS

ECLASS-13.0	27141152
ECLASS-15.0	27141152

ETIM

ETIM 10.0	EC002780

UNSPSC

UNSPSC 21.0	39121400

Environmental product compliance

EU RoHS

Fulfills EU RoHS substance requirements	Yes
Exemption	6(c), 7(c)-I

China RoHS

Environment friendly use period (EFUP)	EFUP-50
	An article-related China RoHS declaration table can be found in the download area for the respective article under "Manufacturer declaration". For all articles with EFUP-E, no China RoHS declaration table issued and required.

EU REACH SVHC

REACH candidate substance (CAS No.)	Lead(CAS: 7439-92-1)
SCIP	ce6977ca-4b29-4229-9086-e1777c73bcca

Phoenix Contact 2026 © - all rights reserved
https://www.phoenixcontact.com

Phoenix Contact USA
586 Fulling Mill Road
Middletown, PA 17057, United States
(+717) 944-1300
info@phoenixcon.com