VAL-MB-T1/T2 1500DC-PV/2+V - Lightning/surge arrester type 1/2

2905641

https://www.phoenixcontact.com/us/products/2905641

Please be informed that the data shown in this PDF document is generated from our online catalog. Please find the complete data in the user documentation. Our general terms of use for downloads are valid.



Lightning current arrester/surge protective device for 2-pos. isolated and grounded 1500 V DC PV systems, for DIN rail mounting, temperature-monitored protective elements, status message on the module.

Your advantages

- Space-saving installation, thanks to the compact design
- Double terminal block for safe and easy equipotential bonding connection
- Screw shafts with raised domes to ensure safe working
- Main connections with extended insertion funnels for increased resistance to creepage
- Visual display for checking the status directly on the device

Commercial data

Item number	2905641
Packing unit	1 pc
Minimum order quantity	1 pc
Sales key	CL01
Product key	CL1231
GTIN	4046356984393
Weight per piece (including packing)	525.8 g
Weight per piece (excluding packing)	488.61 g
Customs tariff number	85354000
Country of origin	IN

VAL-MB-T1/T2 1500DC-PV/2+V - Lightning/surge arrester type 1/2

2905641

https://www.phoenixcontact.com/us/products/2905641

Technical data

Notes

General

Note	The product is also suitable for use in photovoltaic systems with max. short-circuit current I_{SCPV} = 15 kA (in accordance with EN 50539-11: 2013).

Product properties

Product type	PV arrester
Product family	VALVETRAB MB
IEC test classification	PV I / II
	PV T1 / T2
EN type	T1 / T2
IEC power supply system	DC
Type	DIN rail module, one-piece
Environment	Indoor
Installation location of the disconnect device	Internal
Accessibility	Accessible
Connection configuration	Y configuration
End-of-life mode	OCFM (Open-Circuit Failure Mode)
Surge protection fault message	optical
Number of ports	One

Insulation characteristics

Pollution degree	2

Connection data

Connection method	Screw connection
Screw thread	M5
Tightening torque	3 Nm
Stripping length	16 mm
Conductor cross-section flexible	2.5 mm² ... 35 mm²
Conductor cross-section AWG	14 ... 2

Dimensions

Dimensional drawing	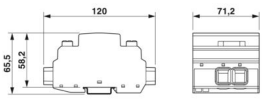
Width	71.2 mm
Height	120 mm

Depth	65.5 mm (incl. DIN rail 7.5 mm)
Horizontal pitch	4 HP

Material specifications

Color	gray (RAL 7042)
	gray (RAL 7042)
Flammability rating according to UL 94	V-0
Insulating material	PA 6.6
	PBT
Housing material	PA 6.6

Mechanical properties

Mechanical data

Open side panel	No

Protective circuit

Mode of protection	(L+) - (L-)
	(L+) - PE
	(L-) - PE
Direction of action	(L+)-PE & (L-)-PE & (L+)-(L-)
Rated load current I_L	50 A
Protective conductor current I_{PE}	≤ 100 µA DC
	≤ 540 µA AC
Standby power consumption P_C	≤ 150 mVA
Nominal discharge current I_n (8/20) µs	20 kA
Maximum discharge current I_{max} (8/20) µs	40 kA
Impulse discharge current (10/350) µs, charge	3.125 As
Impulse discharge current (10/350) µs, specific energy	9.77 kJ/Ω
Impulse discharge current (10/350) µs, peak value I_{imp}	6.25 kA
Total discharge current I_{Total} (8/20) µs	40 kA
Total discharge current I_{Total} (10/350) µs	12.5 kA
Voltage protection level U_p	≤ 4.5 kV
Residual voltage U_{res}	≤ 4.5 kV (at I_n)
	≤ 3.3 kV (at 3 kA)
	≤ 3.6 kV (at 6.25 kA)
	≤ 3.8 kV (at 10 kA)
	≤ 4.2 kV (at 15 kA)
	≤ 5.4 kV (at 40 kA)
Response time t_A	≤ 25 ns

PV protective circuit

Connection configuration	Y configuration
End-of-life mode	OCFM (Open-Circuit Failure Mode)

Protective circuit DC voltage side (DC)

Maximum continuous operating voltage U_{CPV}	1500 V DC
Short-circuit current rating I_{SCPV}	2000 A
Open-circuit voltage U_{OCSTC}	≤ 1250 V DC
Maximum discharge current I_{max} (8/20) µs	40 kA
Response time t_A	≤ 25 ns
Impulse discharge current (10/350) µs, charge	3.125 As
Impulse discharge current (10/350) µs, specific energy	9.77 kJ/Ω
Impulse discharge current (10/350) µs, peak value I_{imp}	6.25 kA
Total discharge current I_{Total} (8/20) µs	40 kA
Total discharge current I_{Total} (10/350) µs	12.5 kA
Insulation resistance R_{iso}	> 5 GΩ (at 500 V DC)
Nominal discharge current I_n (8/20) µs	20 kA
Rated load current I_L	50 A
Continuous operating current I_{CPV}	< 100 µA
Maximum continuous operating voltage U_{CPV}	1500 V DC
Short-circuit current rating I_{SCPV}	2000 A
Residual voltage U_{res}	≤ 4.5 kV (at I_n)
	≤ 3.3 kV (at 3 kA)
	≤ 3.6 kV (at 6.25 kA)
	≤ 3.8 kV (at 10 kA)
	≤ 4.2 kV (at 15 kA)
	≤ 5.4 kV (at 40 kA)
Protective conductor current I_{PE}	≤ 100 µA DC
	≤ 540 µA AC
Voltage protection level U_p	≤ 4.5 kV
Standby power consumption P_C	≤ 150 mVA

Additional technical data

TOV behavior at U_T	Suitable for temporary voltages up to 1550 V DC

Environmental and real-life conditions

Ambient conditions

Degree of protection	IP20 (only when all terminal points are used)
Ambient temperature (operation)	-40 °C ... 80 °C
Ambient temperature (storage/transport)	-40 °C ... 80 °C
Altitude	≤ 6000 m (amsl)
Permissible humidity (operation)	5 % ... 95 %
Shock (operation)	50g (Half-sine / 11 ms / 3x ±X, ±Y, ±Z)
Vibration (operation)	5g (5 - 500 Hz/2.5 h/X, Y, Z)

Standards and regulations

Standards/specifications	EN 61643-31
Note	2019
Standards/specifications	IEC 61643-31
Note	2018

Mounting

Mounting type	DIN rail: 35 mm

Drawings

Dimensional drawing

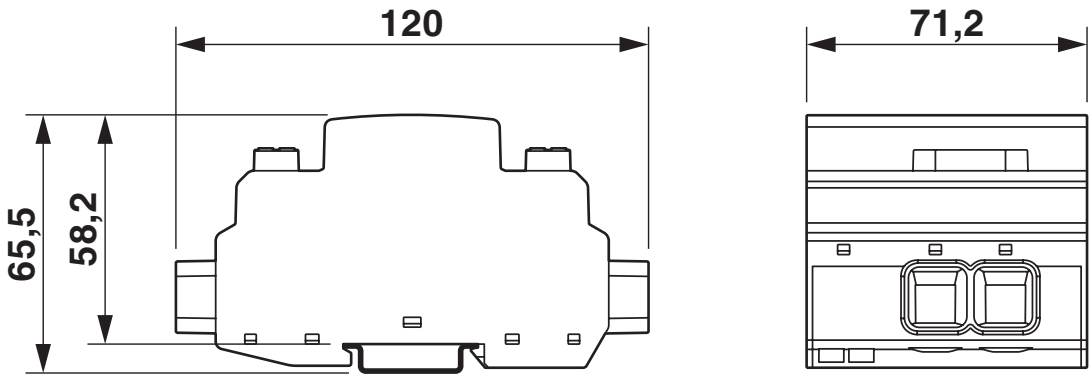

Circuit diagram

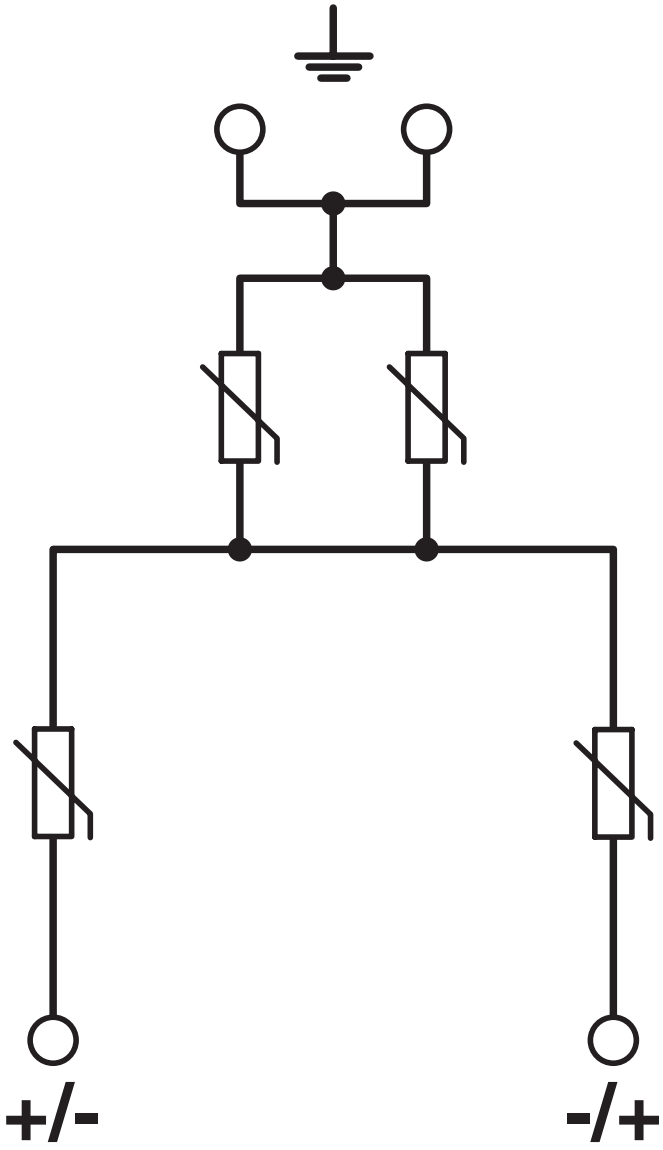

Approvals

To download certificates, visit the product detail page: https://www.phoenixcontact.com/us/products/2905641

IECEE CB Scheme
Approval ID: NL-81007

CCA
Approval ID: NTR-NL 7938

KEMA-KEUR
Approval ID: 71-127691

Classifications

ECLASS

ECLASS-13.0	27171401
ECLASS-15.0	27171401

ETIM

ETIM 10.0	EC000381

UNSPSC

UNSPSC 21.0	39121600

Environmental product compliance

EU RoHS

Fulfills EU RoHS substance requirements	Yes, No exemptions

China RoHS

Environment friendly use period (EFUP)	EFUP-E
	No hazardous substances above the limits

EU REACH SVHC

REACH candidate substance (CAS No.)	No substance above 0.1 wt%

Phoenix Contact 2026 © - all rights reserved
https://www.phoenixcontact.com

Phoenix Contact USA
586 Fulling Mill Road
Middletown, PA 17057, United States
(+717) 944-1300
info@phoenixcon.com