FLT-SEC-T1+T2-2C-350/25-FM - Type 1+2 special combined lightning current and surge arrester

2905467

https://www.phoenixcontact.com/us/products/2905467

Please be informed that the data shown in this PDF document is generated from our online catalog. Please find the complete data in the user documentation. Our general terms of use for downloads are valid.



Plug-in lightning and surge arrester combination, in accordance with Type 1+2/Class I+II, for 2-phase power supply networks, with combined PE and N installed in one conductor (L1, L2, PEN).

Your advantages

- Surge protection family for universal use with optimum energy coordination from the lightning current arrester to the device protection
- Easy to maintain due to consistently pluggable protection modules
- Excellent level of information provided by mechanical/visual status indicator and remote indication contact
- Optimum protective effect in the event of high-energy lightning currents, thanks to spark gap technology with low residual voltage characteristic
- Maximum protection against dynamic overvoltages for sensitive devices, thanks to direct coordination with varistor arresters connected in parallel

Commercial data

Item number	2905467
Packing unit	1 pc
Minimum order quantity	1 pc
Sales key	CL01
Product key	CL1241
GTIN	4046356950596
Weight per piece (including packing)	630.7 g
Weight per piece (excluding packing)	629.4 g
Customs tariff number	85363030
Country of origin	DE

Technical data

Product properties

Product type	Arrester combination
Product family	SEC Family
IEC test classification	I + II
	I
	T1 + T2
	T1
EN type	T1 + T2
	T1
IEC power supply system	TN-C
Type	DIN rail module, two-section, divisible
Number of positions	2
Surge protection fault message	Optical, remote indicator contact
Number of ports	One

Insulation characteristics

Overvoltage category	III
Pollution degree	2

Electrical properties

Nominal frequency f_N	50 Hz (60 Hz)

Indicator/remote signaling

Connection name	Remote fault indicator contact
Switching function	Changeover contact
Operating voltage	12 V AC ... 250 V AC
	125 V DC (200 mA DC)
Operating current	10 mA AC ... 1 A AC
	1 A DC (30 V DC)

Connection data

Connection method	Screw terminal blocks
Screw thread	M5
Tightening torque	4.5 Nm
Stripping length	18 mm
Conductor cross-section flexible	2.5 mm² ... 35 mm²
Conductor cross-section rigid	2.5 mm² ... 35 mm²
Conductor cross-section AWG	13 ... 2
Connection method	Fork-type cable lug
Conductor cross-section flexible	1.5 mm² ... 16 mm²

Remote fault indicator contact

Connection method	Plug-in/screw connection via COMBICON
Screw thread	M2
Tightening torque	0.25 Nm
Stripping length	7 mm
Conductor cross-section flexible	0.14 mm² ... 1.5 mm²
Conductor cross-section rigid	0.14 mm² ... 1.5 mm²
Conductor cross-section AWG	28 ... 16

Dimensions

Dimensional drawing	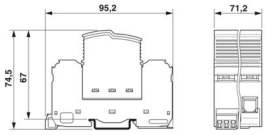
Width	71.2 mm
Height	95.2 mm
Depth	74.5 mm
Horizontal pitch	4 HP

Material specifications

Color (Male connector)	light gray (RAL 7035)
Color (Base element)	gray (RAL 7042)
Flammability rating according to UL 94	V-0
CTI value of material	600
Insulating material	PA6.6-FR 20% GF
	PBT-FR
Material group	I
Housing material	PA 6.6-FR 20 % GF
	PBT-FR

Mechanical properties

Mechanical data

Open side panel	No

Protective circuit

Mode of protection	L-PEN
Direction of action	2L-N/PE
Nominal voltage U_N	240/415 V AC (TN-C)
Nominal frequency f_N	50 Hz (60 Hz)
Maximum continuous operating voltage U_C	350 V AC
Rated load current I_L	125 A (< 55 °C)

Nominal discharge current I_n (8/20) µs	25 kA
Impulse discharge current (10/350) µs, charge	12.5 As
Impulse discharge current (10/350) µs, specific energy	160 kJ/Ω
Impulse discharge current (10/350) µs, peak value I_{imp}	25 kA
Follow current interrupt rating I_{fi}	25 kA (264 V AC)
	3 kA (350 V AC)
Short-circuit current rating I_{SCCR}	25 kA (264 V AC)
	3 kA (350 V AC)
Voltage protection level U_p	≤ 1.5 kV
Residual voltage U_{res}	≤ 1.5 kV (at I_n)
	≤ 1.2 kV (at 10 kA)
	≤ 1 kV (at 5 kA)
	≤ 0.9 kV (at 3 kA)
Front-of-wave sparkover voltage at 6 kV (1.2/50) µs	≤ 1.5 kV
TOV behavior at U_T	415 V AC (5 s / withstand mode)
	457 V AC (120 min / safe failure mode)
Response time t_A	≤ 25 ns
Max. backup fuse with V-type through wiring	125 A (gG)
Max. backup fuse with branch wiring	315 A (gG)

Additional technical data

Maximum discharge current I_{max} (8/20) µs	100 kA

Environmental and real-life conditions

Ambient conditions

Degree of protection	IP20 (only when all terminal points are used)
Ambient temperature (operation)	-40 °C ... 80 °C
Ambient temperature (storage/transport)	-40 °C ... 80 °C
Altitude	≤ 2000 m (amsl)
Permissible humidity (operation)	5 % ... 95 %
Shock (operation)	30g (Half-sine / 11 ms / 3x ±X, ±Y, ±Z)
Vibration (operation)	5g (5 - 500 Hz/2.5 h/X, Y, Z)

Approvals

UL specifications

Maximum continuous operating voltage MCOV (L-L)	528 V AC
Maximum continuous operating voltage MCOV (L-G)	264 V AC
Short-circuit current rating (SCCR)	50 kA
Voltage protection rating VPR (L-L)	2000 V
Voltage protection rating VPR (L-G)	1200 V
Nominal discharge current I_n	20 kA
Mode of protection	L-L

	L-G
Nominal voltage	240 V AC
	120/240 V AC
	240/415 V AC
Rated load current I_L	50 A
Power distribution system	Delta
	Split phase
	Wye
Nominal frequency	50/60 Hz
SPD Type	2CA

UL indicator/remote signaling

Operating voltage	125 V AC
AC operating current	1 A AC

UL connection data

Tightening torque	40 lb_f-in.
Conductor cross-section AWG	3 ... 2

Standards and regulations

Air clearances and creepage distances

Standards/regulations	DIN VDE 0110-1 / IEC 60664-1 / IEC 61643-1
Standards/specifications	IEC 61643-11
Note	2011

EN 61643-11

Standards/specifications	EN 61643-11
Note	2012

Mounting

Mounting type	DIN rail: 35 mm

Drawings

Dimensional drawing

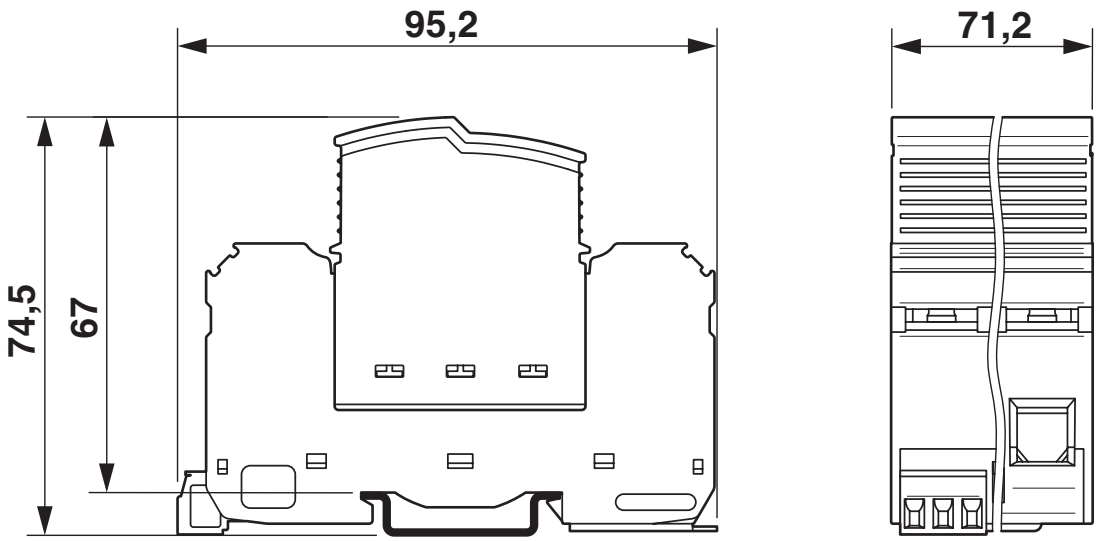

Product drawing



Circuit diagram

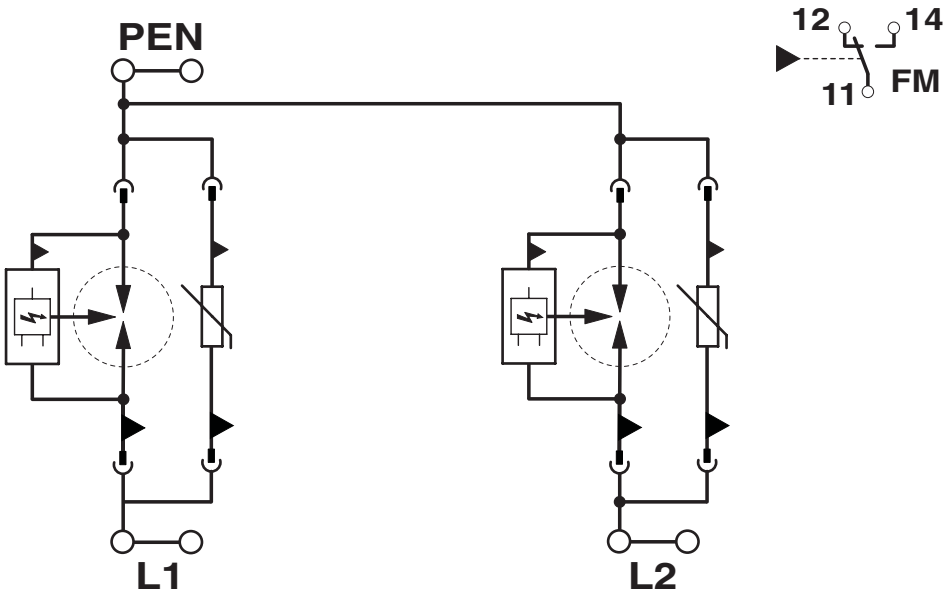

Approvals

To download certificates, visit the product detail page: https://www.phoenixcontact.com/us/products/2905467

cUL Recognized
Approval ID: FILE E 330181

UL Recognized
Approval ID: FILE E 330181

IECEE CB Scheme
Approval ID: NL-58252

CCA
Approval ID: NTR-NL 7736

KEMA-KEUR
Approval ID: 71-165049

UAE-RoHS
Approval ID: 23-10-88887

Classifications

ECLASS

ECLASS-13.0	27171204
ECLASS-15.0	27171204

ETIM

ETIM 10.0	EC001457

UNSPSC

UNSPSC 21.0	39121600

Environmental product compliance

EU RoHS

Fulfills EU RoHS substance requirements	Yes, No exemptions

China RoHS

Environment friendly use period (EFUP)	EFUP-E
	No hazardous substances above the limits

EU REACH SVHC

REACH candidate substance (CAS No.)	No substance above 0.1 wt%

Phoenix Contact 2026 © - all rights reserved
https://www.phoenixcontact.com

Phoenix Contact USA
586 Fulling Mill Road
Middletown, PA 17057, United States
(+717) 944-1300
info@phoenixcon.com