VAL-SEC-T2-3S-175-FM - Type 2 surge arrester

2905354

https://www.phoenixcontact.com/us/products/2905354

Please be informed that the data shown in this PDF document is generated from our online catalog. Please find the complete data in the user documentation. Our general terms of use for downloads are valid.



Plug-in surge arrester, in accordance with Type 2/Class II, for 3-phase power supply networks with separate N and PE (5-conductor system: L1, L2, L3, N, PE), with remote indication contact.

Your advantages

- Surge protection family for universal use with optimum energy coordination from the lightning current arrester to the device protection
- Easy to maintain due to consistently pluggable protection modules
- Excellent level of information provided by mechanical/visual status indicator and remote indication contact
- More space in the control cabinet due to the narrow overall width of just 12 mm per position and use without separate backup fuse up to 315 A gG

Commercial data

Item number	2905354
Packing unit	1 pc
Minimum order quantity	1 pc
Sales key	CL01
Product key	CL1351
GTIN	4046356948029
Weight per piece (including packing)	379.9 g
Weight per piece (excluding packing)	204.278 g
Customs tariff number	85363090
Country of origin	DE

Technical data

Product properties

Product type	Surge arrester
Product family	SEC Family
IEC test classification	II
	T2
EN type	T2
IEC power supply system	TN-S
	TT
Type	DIN rail module, two-section, divisible
Number of positions	4
Surge protection fault message	Optical, remote indicator contact
Number of ports	One

Insulation characteristics

Overvoltage category	III
Pollution degree	2

Electrical properties

Nominal frequency f_N	50 Hz (60 Hz)

Indicator/remote signaling

Connection name	Remote fault indicator contact
Switching function	Changeover contact
Operating voltage	5 V AC ... 250 V AC
	125 V DC (200 mA DC)
Operating current	5 mA AC ... 1 A AC
	1 A DC (30 V DC)

Connection data

Connection method	Screw connection
Screw thread	M5
Tightening torque	4.5 Nm
Stripping length	16 mm
Conductor cross-section flexible	2.5 mm² ... 16 mm²
Conductor cross-section rigid	2.5 mm² ... 25 mm²
Conductor cross-section AWG	12 ... 4
Connection method	Fork-type cable lug
Conductor cross-section flexible	1.5 mm² ... 6 mm²

Remote fault indicator contact

Connection method	Plug-in/screw connection via COMBICON
Screw thread	M2
Tightening torque	0.25 Nm

Stripping length	7 mm
Conductor cross-section flexible	0.14 mm² ... 1.5 mm²
Conductor cross-section rigid	0.14 mm² ... 1.5 mm²
Conductor cross-section AWG	28 ... 16

Dimensions

Dimensional drawing	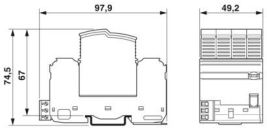
Width	49.2 mm
Height	97.9 mm
Depth	74.5 mm (incl. DIN rail 7.5 mm)
Horizontal pitch	2.7 HP

Material specifications

Color (Male connector)	light gray (RAL 7035)
Color (Base element)	gray (RAL 7042)
Flammability rating according to UL 94	V-0
CTI value of material	600
Insulating material	PA6.6-FR 20% GF
	PBT-FR
Material group	I
Housing material	PA 6.6-FR 20 % GF
	PBT-FR

Protective circuit

Mode of protection	L-N
	L-PE
	N-PE
Direction of action	3L-N & N-PE
Nominal voltage U_N	120/208 V AC (TN-S)
	120/208 V AC (TT)
Nominal frequency f_N	50 Hz (60 Hz)
Maximum continuous operating voltage U_C (L-N)	175 V AC
Maximum continuous operating voltage U_C (L-PE)	175 V AC
Maximum continuous operating voltage U_C (N-PE)	150 V AC
Rated load current I_L	40 A (Biconnect M4 fork-type cable lug 6 mm²)
	63 A (TWIN ferrule 2 x 10 mm²)
Protective conductor current I_{PE}	≤ 1 µA
Standby power consumption P_C	≤ 420 mVA
Nominal discharge current I_n (8/20) µs	20 kA
Maximum discharge current I_{max} (8/20) µs	40 kA

Follow current interrupt rating I_{fi} (N-PE)	100 A (150 V AC)
Short-circuit current rating I_{SCCR}	25 kA (for a backup fuse of up to 315 A gG)
	50 kA (for a backup fuse of up to 200 A gG)
Voltage protection level U_p (L-N)	≤ 0.85 kV
Voltage protection level U_p (L-PE)	≤ 1.3 kV
Voltage protection level U_p (N-PE)	≤ 0.95 kV
Residual voltage U_{res} (L-N)	≤ 0.85 kV (at I_n)
	≤ 0.75 kV (at 10 kA)
	≤ 0.65 kV (at 5 kA)
	≤ 0.63 kV (at 4 kA)
	≤ 0.57 kV (at 2 kA)
Residual voltage U_{res} (N-PE)	≤ 0.4 kV (at I_n)
	≤ 0.4 kV (at 10 kA)
	≤ 0.4 kV (at 5 kA)
	≤ 0.4 kV (at 4 kA)
	≤ 0.4 kV (at 2 kA)
TOV behavior at U_T (L-N)	240 V AC (5 s / withstand mode)
	240 V AC (120 min / safe failure mode)
TOV behavior at U_T (N-PE)	1200 V AC (200 ms / withstand mode)
Response time t_A (L-N)	≤ 25 ns
Response time t_A (L-PE)	≤ 100 ns
Response time t_A (N-PE)	≤ 100 ns
Max. backup fuse with V-type through wiring	40 A (gG / Biconnect M4 fork-type cable lug, 6 mm²)
	63 A (gG / TWIN ferrule 2x 10mm²)
Max. backup fuse with branch wiring	315 A (gG)

Additional technical data

TOV behavior at U_T (L-PE)	710 V AC (30 A / 1 s / withstand mode)
TOV behavior at U_T (N-PE)	600 V AC (30 A / 1 s / withstand mode)

Environmental and real-life conditions

Ambient conditions

Degree of protection	IP20
Ambient temperature (operation)	-40 °C ... 80 °C
Ambient temperature (storage/transport)	-40 °C ... 80 °C
Altitude	≤ 2000 m (amsl)
Permissible humidity (operation)	5 % ... 95 %
Shock (operation)	30g (Half-sine / 11 ms / 3x ±X, ±Y, ±Z)
Vibration (operation)	5g (10 ... 500 Hz / 2.5 h / X, Y, Z)

Approvals

UL specifications

Maximum continuous operating voltage MCOV (L-L)	350 V AC
Maximum continuous operating voltage MCOV (L-N)	175 V AC

Maximum continuous operating voltage MCOV (L-G)	175 V AC
Maximum continuous operating voltage MCOV (N-G)	150 V AC
Nominal discharge current I_n (L-L)	20 kA
Nominal discharge current I_n (L-N)	20 kA
Nominal discharge current I_n (L-G)	20 kA
Nominal discharge current I_n (N-G)	20 kA
Mode of protection	L-L
	L-N
	L-G
	N-G
Nominal voltage	120/208 V AC
Power distribution system	Wye
Nominal frequency	50/60 Hz
Measured limiting voltage MLV (L-L)	2010 V
Measured limiting voltage MLV (L-N)	1510 V
Measured limiting voltage MLV (L-G)	1630 V
Measured limiting voltage MLV (N-G)	560 V
Follow current (L-G)	200 A (150 V AC)
SPD Type	4CA

UL indicator/remote signaling

Operating voltage	125 V AC
AC operating current	1 A AC

UL connection data

Tightening torque	40 lb_f-in. ... 50 lb_f-in.
Conductor cross-section AWG	14 ... 2 (solid)
	14 ... 4 (flexible)

Standards and regulations

Air clearances and creepage distances

Standards/regulations	DIN VDE 0110-1 / IEC 60664-1 / IEC 61643-11 / UL 1449
Standards/specifications	IEC 61643-11
Note	2011

EN 61643-11

Standards/specifications	EN 61643-11
Note	2012

Mounting

Mounting type	DIN rail: 35 mm

Drawings

Dimensional drawing

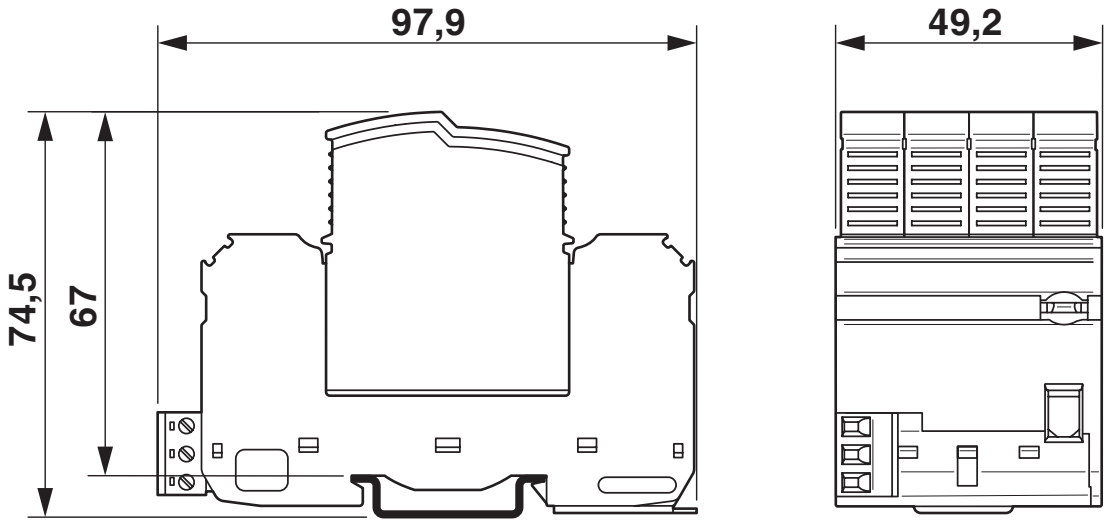

Circuit diagram

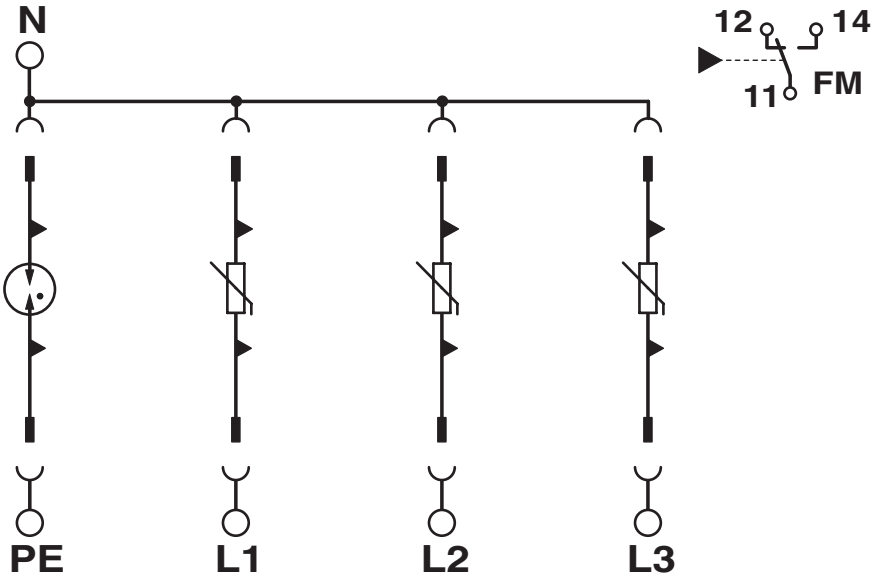

Approvals

To download certificates, visit the product detail page: https://www.phoenixcontact.com/us/products/2905354

cUL Recognized
Approval ID: FILE E 330181

UL Recognized
Approval ID: FILE E 330181

IECEE CB Scheme
Approval ID: NL-34356

CCA
Approval ID: NTR-NL 7347

KEMA-KEUR
Approval ID: 2196453.01

DNV GL
Approval ID: TAE000023D

UAE-RoHS
Approval ID: 23-10-88707

Classifications

ECLASS

ECLASS-13.0	27171202
ECLASS-15.0	27171202

ETIM

ETIM 10.0	EC000941

UNSPSC

UNSPSC 21.0	39121600

Environmental product compliance

EU RoHS

Fulfills EU RoHS substance requirements	Yes, No exemptions

China RoHS

Environment friendly use period (EFUP)	EFUP-E
	No hazardous substances above the limits

EU REACH SVHC

REACH candidate substance (CAS No.)	No substance above 0.1 wt%

Phoenix Contact 2026 © - all rights reserved
https://www.phoenixcontact.com

Phoenix Contact USA
586 Fulling Mill Road
Middletown, PA 17057, United States
(+717) 944-1300
info@phoenixcon.com