PSR-MS20-1NO-1DO-24DC-SC - Safety relays

2904950

https://www.phoenixcontact.com/us/products/2904950

Please be informed that the data shown in this PDF document is generated from our online catalog. Please find the complete data in the user documentation. Our general terms of use for downloads are valid.



Safety relay for emergency stop and safety doors up to SIL 1, Cat. 1, PL c, depending on the application up to SIL 3, Cat. 4, PL e, 1-channel operation, automatic start, 1 enabling current path, U_S = 24 V DC, fixed screw terminal block

Your advantages

- Depending on the application, up to cat. 4/PL e in accordance with ISO 13849-1, SIL CL 3 in accordance with EN IEC 62061
- Low housing width of just 6.8 mm
- 1-channel control
- 1 enabling current path, 1 digital signal output
- Automatic activation

ELEKTROGERÄTE RÜCKNAHME

Commercial data

Item number	2904950
Packing unit	1 pc
Minimum order quantity	1 pc
Sales key	DN01
Product key	DNA171
GTIN	4046356904988
Weight per piece (including packing)	77 g
Weight per piece (excluding packing)	69 g
Customs tariff number	85371098
Country of origin	DE

Technical data

Notes

Note on application

Note on application	Only for industrial use

Product properties

Product type	Safety relays
Product family	PSRmini
Application	Emergency stop
	Safety door
	Magnetic switch
Control	1-channel
Relay type	Electromechanical relay with force-guided contacts in accordance with IEC/EN 61810-3

Insulation characteristics

Overvoltage category	II, III (See the section “Insulation coordination”)
Degree of pollution	2

Times

Typical response time	< 175 ms
Typ. starting time with U_s	< 250 ms (when controlled via A1)
Typical release time	< 20 ms (when controlled via A1 or S12)
Restart time	< 1 s (Boot time)
Recovery time	< 500 ms

Electrical properties

Maximum power dissipation for nominal condition	3 W (U_S = 26.4 V, I_L^2 = 36 A², $P_{Total\ max}$ = 1.2 W + 1.8 W)
Nominal operating mode	100% operating factor
Rated insulation voltage	250 V AC
Rated surge voltage/insulation	See data sheet, section “Insulation coordination”.

Supply

Designation	A1/A2
Rated control circuit supply voltage U_S	20.4 V DC ... 26.4 V DC
Rated control circuit supply voltage U_S	24 V DC -15 % / +10 %
Rated control supply current I_S	typ. 42 mA
Power consumption at U_S	typ. 1 W
Inrush current	4.5 A (Δt < 120 µs at U_s)
Filter time	1 ms (at A1 in the event of voltage dips at U_s)
Protective circuit	Surge protection; Suppressor diode
	Serial protection against polarity reversal

Input data

Digital: Sensor circuit (S12)

Description of the input	safety-related sensor inputs
Number of inputs	1
Input voltage range "0" signal	0 V DC ... 5 V DC (for safe Off; at S12)
Input voltage range "1" signal	20.4 V DC ... 26.4 V DC
Input current range "0" signal	0 mA ... 2 mA (for safe Off; at S12)
Inrush current	< 20 mA (at U_S)
Filter time	max. 1.5 ms (Test pulse width of low test pulses)
	Test pulse rate = 5 x Test pulse width
Max. permissible overall conductor resistance	150 Ω
Protective circuit	Suppressor diode
Current consumption	< 5 mA (at U_S)

Digital: Start circuit (S35)

Description of the input	non-safety-related
Number of inputs	1
Input voltage range "1" signal	20.4 V DC ... 26.4 V DC
Inrush current	< 10 mA
Max. permissible overall conductor resistance	150 Ω
Protective circuit	Suppressor diode
Current consumption	< 10 mA

Output data

Relay: Enabling current path (13/14)

Output description	safety-related N/O contacts
Number of outputs	1 (undelayed)
Contact switching type	1 enabling current path
Contact material	$AgSnO_2$
Switching voltage	min. 12 V AC/DC
	max. 250 V AC/DC
Switching power	min. 60 mW
Inrush current	min. 3 mA
	max. 6 A
Switching capacity	5 A (AC15)
	4 A (DC13)
Limiting continuous current	6 A
Sq. Total current	36 A^2 (observe derating)
Switching frequency	max. 0.1 Hz
Mechanical service life	10x 10^6 cycles
Output fuse	6 A gL/gG
	4 A gL/gG (for low-demand applications)

Signal: M1

Output description	non-safety-related

Number of outputs	1 (digital, PNP)
Voltage	22 V DC (U_s - 2 V)
Current	max. 100 mA
Maximum inrush current	500 mA (Δt = 1 ms at U_s)
Protective circuit	Suppressor diode

Connection data

Connection technology

pluggable	no

Conductor connection

Connection method	Screw connection
Conductor cross-section rigid	0.2 mm² ... 2.5 mm²
Conductor cross-section flexible	0.2 mm² ... 2.5 mm²
Conductor cross-section AWG	26 ... 12
Stripping length	12 mm
Screw thread	M3
Tightening torque	0.5 Nm ... 0.6 Nm

Signaling

Status display	2 x LED (green)
Operating voltage display	1 x LED (green)

Dimensions

Width	6.8 mm
Height	93.1 mm
Depth	102.5 mm

Material specifications

Color (Housing)	yellow (RAL 1018)
Housing material	PBT

Characteristics

Safety data

Stop category (EN 60204-1)	0

Safety data: EN ISO 13849

Performance level (PL)	c (up to PL e depending on the application)

Safety data: IEC 61508 - High demand

Safety Integrity Level (SIL)	1 (up to SIL 3 depending on the application)

Safety data: IEC 61508 - Low demand

Safety Integrity Level (SIL)	1 (up to SIL 3 depending on the application)

Safety data: EN IEC 62061

Safety Integrity Level (SIL)	1 (up to SIL 3 depending on the application)

Environmental and real-life conditions

Ambient conditions

Degree of protection	IP20
Min. degree of protection of inst. location	IP54
Ambient temperature (operation)	-40 °C ... 60 °C (observe derating)
Ambient temperature (storage/transport)	-40 °C ... 85 °C
Maximum altitude	≤ 2000 m (Above sea level)
Max. permissible humidity (storage/transport)	75 % (on average, 85% infrequently, non-condensing)
Max. permissible relative humidity (operation)	75 % (on average, 85% infrequently, non-condensing)
Shock	15g
Vibration (operation)	10 Hz ... 150 Hz, amplitude 0.15 mm, 2g

Approvals

CE

Certificate	CE-compliant

Mounting

Mounting type	DIN rail mounting
Assembly note	See derating curve
Mounting position	vertical or horizontal

Drawings

Application drawing

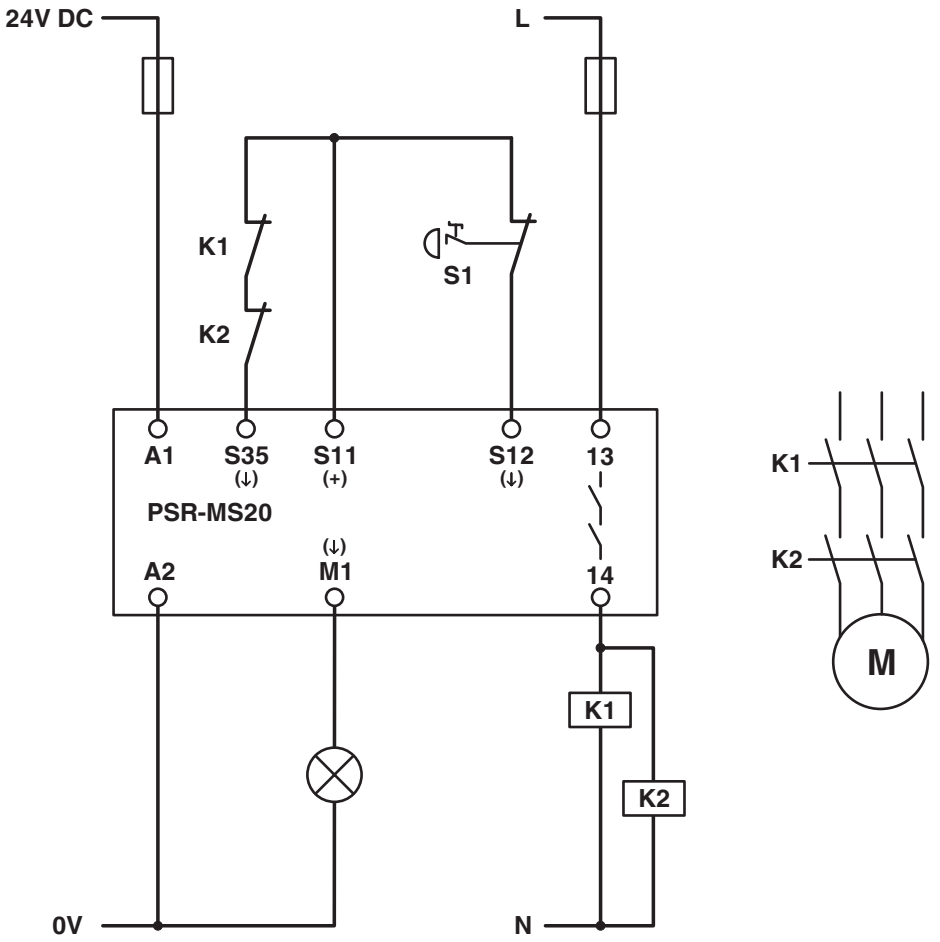

Block diagram

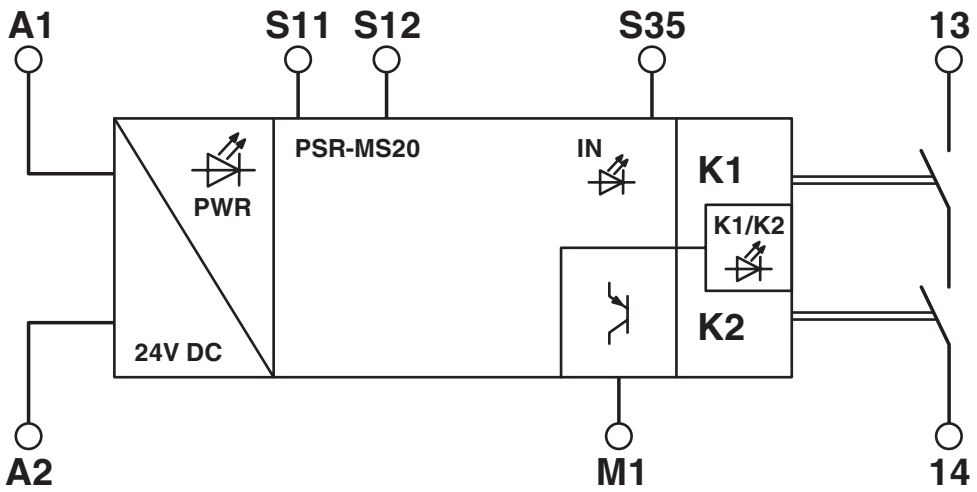

Block diagram

Block diagram

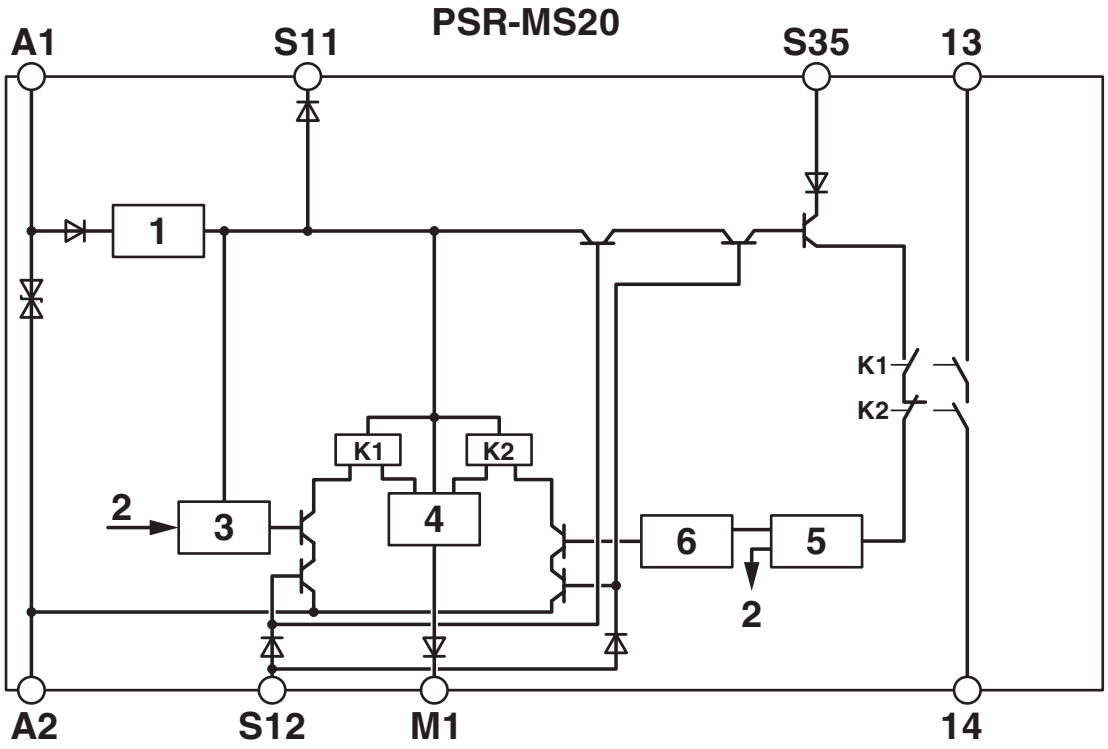

Key:

1 = Voltage limitation
2 = Channel 1
3 = Control circuit channel 1
4 = Control circuit signal output
5 = Start channel 1 and 2
6 = Control circuit channel 2
K1, K2 = Force-guided elementary relays

Approvals

To download certificates, visit the product detail page: https://www.phoenixcontact.com/us/products/2904950

Functional Safety
Approval ID: 44 205 13755202

Functional Safety
Approval ID: 44 780 13755207

cULus Listed
Approval ID: E140324

Classifications

ECLASS

ECLASS-13.0	27371819
ECLASS-15.0	27371819
ECLASS-15.0 ASSET	27250101

ETIM

ETIM 10.0	EC001449

UNSPSC

UNSPSC 21.0	39122200

Environmental product compliance

EU RoHS

Fulfills EU RoHS substance requirements	Yes
Exemption	7(a), 7(a)-I, 7(c)-I

China RoHS

Environment friendly use period (EFUP)	EFUP-50
	An article-related China RoHS declaration table can be found in the download area for the respective article under "Manufacturer declaration". For all articles with EFUP-E, no China RoHS declaration table issued and required.

EU REACH SVHC

REACH candidate substance (CAS No.)	Lead(CAS: 7439-92-1)
SCIP	0c03d749-17bb-4732-96e1-ff3db35630a5

Phoenix Contact 2026 © - all rights reserved
https://www.phoenixcontact.com

Phoenix Contact USA
586 Fulling Mill Road
Middletown, PA 17057, United States
(+717) 944-1300
info@phoenixcon.com