QUINT4-PS/1AC/24DC/10/+ - Power supply

2904616

https://www.phoenixcontact.com/us/products/2904616

Please be informed that the data shown in this PDF document is generated from our online catalog. Please find the complete data in the user documentation. Our general terms of use for downloads are valid.

CRA-READY



Primary-switched QUINT POWER power supply, DIN rail mounting, selectable output characteristic curve and SFB (Selective Fuse Breaking) Technology, protective coating and integrated decoupling MOSFET, input: 1-phase, output: 24 V DC/10 A. Product is being prepared for compliance with the Cyber Resilience Act (CRA).

Product description

The fourth generation of the high-performance QUINT POWER power supplies ensures superior system availability by means of new functions. Signaling thresholds and characteristic curves can be individually adjusted via the NFC interface.
The unique SFB technology and preventive function monitoring of the QUINT POWER power supply increase the availability of your application.

Your advantages

- Integrated decoupling MOSFET maximizes system availability and operational safety
- Double overvoltage protection (OVP) switches the output off in the event of an error to reliably protect the loads against overvoltages.
- Protective coating offers protection against dust, corrosive gases, and humidity
- ATEX/IECEx approval in accordance with IEC 60079-0,-7, -11, and -15
- Wide temperature range allows use under extreme ambient conditions of -40°C to +75°C

ELEKTROGERÄTE RÜCKNAHME

Commercial data

Item number	2904616
Packing unit	1 pc

Minimum order quantity	1 pc
Sales key	CM10
Product key	CMPI13
GTIN	4063151023478
Weight per piece (including packing)	1,156.5 g
Weight per piece (excluding packing)	897 g
Customs tariff number	85044095
Country of origin	TH

Technical data

Notes

Note on application

Note on application	As things stand now, we are preparing the product so that, as of December 11, 2027, it will comply with the requirements of the EU Cyber Resilience Act (CRA) based on the information currently available regarding the CRA.

Input data

Control input (configurable) Rem	Output power ON/OFF (SLEEP MODE)
Default	Output power ON (>40 kΩ/24 V DC/open bridge between Rem and SGnd)

AC operation

Network type	Star network
Input voltage	min. 77 V DC
Nominal input voltage range	100 V AC ... 240 V AC
Input voltage range	100 V AC ... 240 V AC -15 % ... +10 %
Derating	< 100 V AC (1 %/V)
Electric strength, max.	300 V AC 60 s
Typical national grid voltage	120 V AC
	230 V AC
Voltage type of supply voltage	AC
Inrush current	typ. 15 A (at 25 °C)
Inrush current integral (I^2t)	< 0.9 A^2s
Inrush current limitation	15 A (after 1 ms)
AC frequency range	50 Hz ... 60 Hz -10 % ... +10 %
Frequency range (f_N)	50 Hz ... 60 Hz -10 % ... +10 %
	16.7 Hz (acc. to EN 50163)
Mains buffering time	typ. 53 ms (120 V AC)
	typ. 55 ms (230 V AC)
Current consumption	3.4 A (100 V AC)
	2.8 A (120 V AC)
	1.5 A (230 V AC)
	1.5 A (240 V AC)
Nominal power consumption	274 VA
Protective circuit	Transient surge protection; Varistor, gas-filled surge arrester
Power factor	0.94
Switch-on time	< 1 s
Typical response time	300 ms (from SLEEP MODE)
Input fuse	8 A (slow-blow, internal)
Recommended breaker for input protection	10 A ... 16 A (Characteristic B, C, D, K or comparable)
Discharge current to PE	< 3.5 mA

	0.7 mA (264 V AC, 60 Hz)

DC operation

Input voltage	min. 77 V DC
Nominal input voltage range	110 V DC ... 250 V DC
Input voltage range	110 V DC ... 250 V DC -18 % ... +40 %
Derating	< 110 V DC (1 %/V)
Voltage type of supply voltage	DC
Current consumption	3 A (110 V DC)
	1.3 A (250 V DC)

Output data

Efficiency	typ. 92.8 % (120 V AC)
	typ. 93.8 % (230 V AC)
Output characteristic	U/I Advanced
	Smart HICCUP
	FUSE MODE
Nominal output voltage	24 V DC
Setting range of the output voltage (U_{Set})	24 V DC ... 28 V DC (constant capacity)
Nominal output current (I_N)	10 A
Static Boost ($I_{Stat.Boost}$)	12.5 A
Dynamic Boost ($I_{Dyn.Boost}$)	20 A (5 s)
Selective Fuse Breaking (I_{SFB})	60 A (15 ms)
Magnetic circuit breaker tripping	A1...A6 / B2...B6 / C1...C3 / Z1...Z6
Derating	> 60 °C ... 70 °C (2.5 %/K)
Feedback voltage resistance	≤ 35 V DC
Protection against overvoltage at the output (OVP)	< 30 V DC (double protection with shut off within 20 ms)
Control deviation	< 0.5 % (Static load change 10 % ... 90 %)
	< 4 % (Dynamic load change 10 % ... 90 %, (10 Hz))
	< 0.25 % (change in input voltage ±10 %)
Residual ripple	< 50 mV_{PP} (with nominal values)
Short-circuit-proof	yes
No-load proof	yes
Output power	240 W
	300 W
	480 W
Apparent power	336 VA (120 V, U_{OUT} = 24 V, I_{OUT} = stat. Boost)
	345 VA (230 V, U_{OUT} = 24 V, I_{OUT} = stat. Boost)
Maximum no-load power dissipation	< 4 W (120 V AC)
	< 4 W (230 V AC)
Power loss nominal load max.	< 19 W (120 V AC)
	< 16 W (230 V AC)
Power dissipation SLEEP MODE	< 3 W (120 V AC)
	< 3 W (230 V AC)

Crest factor	typ. 1.57 (120 V AC)
	typ. 1.59 (230 V AC)
Rise time	< 100 ms (U_{Out} = 10 % ... 90 %)
Connection in parallel	yes, for redundancy and increased capacity
Connection in series	yes
Fuse protection (secondary side)	electronic
	thermal-magnetic
	thermal

Signal

Signal ground SGnd	Reference potential for Out1, Out2, and Rem

Signal Out 1 (configurable)

Digital	24 V DC 20 mA
Default	24 V DC 20 mA 24 V DC for U_{Out} > 0.9 x U_{Set}

Signal Out 2 (configurable)

Digital	24 V DC 20 mA
Analog	4 mA ... 20 mA ±5 % (Load ≤400 Ω)
Default	24 V DC 20 mA 24 V DC for P_{Out} < P_N

Signal relay 13/14 (configurable)

Default	closed (U_{out} > 0.9 U_{Set})
Digital	24 V DC 1 A
	30 V AC/DC 0.5 A

Connection data

Input

Connection method	Screw connection
Conductor cross-section, rigid min.	0.2 mm²
Conductor cross-section, rigid max.	2.5 mm²
Conductor cross-section flexible min.	0.2 mm²
Conductor cross-section flexible max.	2.5 mm²
Single conductor/flexible terminal point with ferrule with plastic sleeve, min.	0.25 mm²
Single conductor/flexible terminal point with ferrule with plastic sleeve, max.	2.5 mm²
Single conductor/flexible terminal point with ferrule without plastic sleeve, min.	0.25 mm²
Single conductor/flexible terminal point with ferrule without plastic sleeve, max.	2.5 mm²
Conductor cross-section AWG min.	24
Conductor cross-section AWG max.	14
Stripping length	6.5 mm
Tightening torque, min	0.5 Nm
Tightening torque max	0.6 Nm

Output

Connection method	Screw connection
Conductor cross-section, rigid min.	0.2 mm²
Conductor cross-section, rigid max.	2.5 mm²
Conductor cross-section flexible min.	0.2 mm²
Conductor cross-section flexible max.	2.5 mm²
Single conductor/flexible terminal point with ferrule with plastic sleeve, min.	0.25 mm²
Single conductor/flexible terminal point with ferrule with plastic sleeve, max.	2.5 mm²
Single conductor/flexible terminal point with ferrule without plastic sleeve, min.	0.25 mm²
Single conductor/flexible terminal point with ferrule without plastic sleeve, max.	2.5 mm²
Conductor cross-section AWG min.	24
Conductor cross-section AWG max.	14
Stripping length	6.5 mm
Tightening torque, min	0.5 Nm
Tightening torque max	0.6 Nm

Signal

Connection method	Push-in connection
Conductor cross-section, rigid min.	0.2 mm²
Conductor cross-section, rigid max.	1.5 mm²
Conductor cross-section flexible min.	0.2 mm²
Conductor cross-section flexible max.	1.5 mm²
Single conductor/flexible terminal point with ferrule with plastic sleeve, min.	0.2 mm²
Single conductor/flexible terminal point with ferrule with plastic sleeve, max.	0.75 mm²
Single conductor/flexible terminal point with ferrule without plastic sleeve, min.	0.2 mm²
Single conductor/flexible terminal point with ferrule without plastic sleeve, max.	1.5 mm²
Conductor cross-section AWG min.	24
Conductor cross-section AWG max.	16
Stripping length	8 mm

Signaling

Types of signaling	LED
	Floating signal contact
	Active signal output Out1 (digital, configurable)
	Active signal output Out2 (analog, configurable)
	Remote contact
	Signal ground SGnd

Signal output

Signal option	Output current
	Output voltage
	Output power
	U_{IN} input voltage OK
	Operating hours
	Early warning of high temperatures
	OVP voltage limitation active
P_{Out}	> 100 % (LED lights up yellow, output power > 240 W)
	> 75 % (LED lights up green, output power > 180 W)
	> 50 % (LED lights up green, output power > 120 W)
U_{Out}	> 0.9 x U_{Set} (LED lights up green)
	< 0.9 x U_{Set} (LED flashes green)

Electrical properties

Number of phases	1
Insulation voltage input/output	4 kV AC (type test)
	2 kV AC (routine test)
Switching frequency	90.00 kHz ... 110.00 kHz (Auxiliary converter stage)
	50.00 kHz ... 245.00 kHz (Main converter stage)
	35.00 kHz ... 700.00 kHz (PFC stage)

Product properties

Product type	Power supply
Product family	QUINT POWER
MTBF (IEC 61709, SN 29500)	> 1165000 h (25 °C)
	> 700000 h (40 °C)
	> 321000 h (60 °C)
Environmental protection directive	RoHS Directive 2011/65/EU
	WEEE
	Reach

Insulation characteristics

Protection class	I
Overvoltage category (EN 61010-1)	II (≤ 5000 m)
Overvoltage category (EN 62477-1)	III (≤ 2000 m)
Overvoltage category (EN 61558-2-16)	II (≤ 5000 m)
Degree of pollution	2

Life expectancy (electrolytic capacitors)

Current	5 A
Temperature	40 °C
Time	247000 h
Additional text	120 V AC

Life expectancy (electrolytic capacitors)

Current	5 A
Temperature	40 °C
Time	247000 h
Additional text	230 V AC

Life expectancy (electrolytic capacitors)

Current	10 A
Temperature	25 °C
Time	288000 h
Additional text	120 V AC

Life expectancy (electrolytic capacitors)

Current	10 A
Temperature	25 °C
Time	345000 h
Additional text	230 V AC

Life expectancy (electrolytic capacitors)

Current	10 A
Temperature	40 °C
Time	112000 h
Additional text	120 V AC

Life expectancy (electrolytic capacitors)

Current	10 A
Temperature	40 °C
Time	138000 h
Additional text	230 V AC

Dimensions

Width	50 mm
Height	130 mm
Depth	125 mm

Installation dimensions

Installation distance right/left	5 mm / 5 mm
Installation distance top/bottom	50 mm / 50 mm

Alternative assembly

Width	122 mm
Height	130 mm
Depth	53 mm

Mounting

Mounting type	DIN rail mounting

Assembly note	alignable: P_N ≥50%, 5 mm horizontally, 15 mm next to active components, 50 mm vertically alignable: P_N <50%, 0 mm horizontally, 40 mm vertically top, 20 mm vertically bottom
Mounting position	horizontal DIN rail NS 35, EN 60715
With protective coating	yes

Material specifications

Flammability rating according to UL 94 (housing / terminal blocks)	V0
Housing material	Metal
Hood version	Stainless steel X6Cr17
Side element version	Aluminum

Environmental and real-life conditions

Ambient conditions

Degree of protection	IP20
Ambient temperature (operation)	-40 °C ... 75 °C (> 60 °C Derating: 2,5 %/K)
Ambient temperature (storage/transport)	-40 °C ... 85 °C
Maximum altitude	≤ 5000 m (> 2000 m, observe derating)
Climatic class	3K22 (in accordance with EN 60721-3-3)
Max. permissible relative humidity (operation)	≤ 100 % (at 25 °C, non-condensing)
Shock	18 ms, 30g, in each space direction (according to IEC 60068-2-27)
Vibration (operation)	5 Hz ... 100 Hz resonance search 2.3g, 90 min., resonance frequency 2.3g, 90 min. (according to DNV GL Class C)
Temp code	T4 (-40 ... +75 °C; > 60 °C, Derating: 2,5 %/K)

Standards and regulations

Rail applications	EN 50121-3-2
	EN 50121-4
	EN 50121-5
	EN 50163
	IEC 62236-3-2
	IEC 62236-4
	IEC 62236-5
	EN 50155
	EN 45545-2 (HL3)
	EN 61373 (Class 1B)
HART FSK Physical Layer Test Specification Compliance	Output voltage U_{Out} compliant
Standard – Limitation of mains harmonic currents	EN 61000-3-2
Standard - Electrical safety	IEC 61010-2-201 (SELV)
Explosive atmosphere	IEC 60079-0
	IEC 60079-7
	IEC 60079-11
	IEC 60079-15

Standard – Safety extra-low voltage	IEC 61010-1 (SELV)
	IEC 61010-2-201 (PELV)
Standard - Safe isolation	IEC 61558-2-16
	IEC 61010-2-201
Standard - safety for equipment for measurement, control, and laboratory use	IEC 61010-1
Battery charging	DIN 41773-1
Noxious gas test	ANSI/ISA 71.04-2013 G3 Harsh Group A
Approval - requirement of the semiconductor industry with regard to mains voltage dips	SEMI F47-0706, EN 61000-4-11

Fire protection in rail vehicles

Standard designation	Fire protection in rail vehicles
Standards/specifications	EN 45545-2 (HL3)

Approvals

CSA	CAN/CSA-C22.2 No. 61010-2-201
	CSA-C22.2 No. 107.1-16
Shipbuilding approval	DNV, BV, LR
SIQ	CB-Scheme (IEC 61010-1, IEC 61010-2-201)
UL approvals	UL Listed UL 508
	UL 121201 & CSA C22.2 No. 213-17 Class I, Division 2, Groups A, B, C, D T4 (Hazardous Location)

Conformity/Approvals

ATEX	SIQ 22 ATEX 245 X
	Ⓔx II 3 G Ex ec ic nC IIC T4 Gc
IECEx	IECEx SIQ 22.0001X
	Ex ec ic nC IIC T4 Gc
Functional Safety in accordance with IEC 61508	SIL 3

EMC data

Electromagnetic compatibility	Conformance with EMC Directive 2014/30/EU
Low Voltage Directive	Conformance with Low Voltage Directive 2014/35/EC
EMC requirements for noise emission	EN 61000-6-3
	EN 61000-6-4
EMC requirements for noise immunity	EN 61000-6-1
	EN 61000-6-2
EMC requirements for power supply	IEC 61850-3 (G,H)
	EN 61000-6-5 (switching devices)

Conducted noise emission

Standards/regulations	EN 55016
	EN 61000-6-3 (Class B)

Noise emission

Standards/regulations	Additional basic standard EN 61000-6-5 (immunity in switching devices), IEC/EN 61850-3 (power supply)

Noise emission

Standards/regulations	EN 55016
	EN 61000-6-3 (Class B)

DNV GL conducted noise emissions

DNV	Class B
Additional text	Bridge and deck area

DNV GL noise radiation

DNV	Class B
Additional text	Bridge and deck area

Harmonic currents

Standards/regulations	EN 61000-3-2
	EN 61000-3-2 (Class A)
Frequency range	0 kHz ... 2 kHz

Flicker

Standards/regulations	EN 61000-3-3
	EN 61000-3-3
Frequency range	0 kHz ... 2 kHz

Electrostatic discharge

Standards/regulations	EN 61000-4-2

Electrostatic discharge

Contact discharge	8 kV (Test Level 4)
Discharge in air	15 kV (Test Level 4)
Comments	Criterion A

Electromagnetic HF field

Standards/regulations	EN 61000-4-3

Electromagnetic HF field

Frequency range	80 MHz ... 1 GHz
Test field strength	20 V/m (Test Level 3)
Frequency range	1 GHz ... 6 GHz
Test field strength	10 V/m (Test Level 3)
Comments	Criterion A

Fast transients (burst)

Standards/regulations	EN 61000-4-4

Fast transients (burst)

Input	4 kV (Test Level 4 - asymmetrical)
Output	4 kV (Test Level 4 - asymmetrical)

Signal	4 kV (Test Level 4 - asymmetrical)
Comments	Criterion A

Surge voltage load (surge)

Standards/regulations	EN 61000-4-5

Surge voltage load (surge)

Input	typ. 3 kV (Test Level 4 - symmetrical)
	typ. 6 kV (Test Level 4 - asymmetrical)
Output	1 kV (Test Level 3 - symmetrical)
	2 kV (Test Level 3 - asymmetrical)
Signal	4 kV (Test Level 4 - asymmetrical)
Comments	Criterion A

Conducted interference

Standards/regulations	EN 61000-4-6

Conducted interference

Input/output/signal	asymmetrical
Frequency range	0.15 MHz ... 80 MHz
Comments	Criterion A
Voltage	10 V (Test Level 3)

Power frequency magnetic field

Standards/regulations	EN 61000-4-8
Frequency	16.7 Hz
	50 Hz
	60 Hz
Test field strength	100 A/m
Additional text	60 s
Comments	Criterion A
Frequency	50 Hz
	60 Hz
Frequency range	50 Hz ... 60 Hz
Test field strength	1 kA/m
Additional text	3 s
Frequency	0 Hz
Test field strength	300 A/m
Additional text	DC, 60 s

Voltage dips

Standards/regulations	EN 61000-4-11
Voltage	230 V AC
Frequency	50 Hz
Voltage dip	70 %
Number of periods	0.5 / 1 / 25 / 30 periods
Additional text	Test Level 2

Comments	Criterion A: 0.5 / 1 / 25 / 30 periods
Voltage dip	40 %
Number of periods	5 / 10 / 50 periods
Additional text	Test Level 2
Comments	Criterion A
Voltage dip	0 %
Number of periods	0,5 / 1 / 5 / 50 / 250 periods
Additional text	Test Level 2
Comments	Criterion A: 0.5 / 1 period Criterion B: 5 / 50 / 250 periods

Pulse-shape magnetic field

Standards/regulations	EN 61000-4-9
Test field strength	1000 A/m
Comments	Criterion A

Attenuated sinusoidal oscillations (ring wave)

Standards/regulations	EN 61000-4-12
Input	2 kV (Test Level 4 - symmetrical)
	4 kV (Test Level 4 - asymmetrical)
Comments	Criterion A

Asymmetrical conducted disturbance variables

Standards/regulations	EN 61000-4-16
Test level 1	15 Hz 150 Hz (Test Level 4)
Voltage	30 V 3 V
Test level 2	150 Hz 1.5 kHz (Test Level 4)
Voltage	3 V
Test level 3	1.5 kHz 15 kHz (Test Level 4)
Voltage	3 V 30 V
Test level 4	15 kHz 150 kHz (Test Level 4)
Voltage	30 V
Test level 5	16.7 Hz 50 Hz 60 Hz (Test Level 4)
Voltage	30 V (10 s)
Test level 6	150 Hz 180 Hz (Test Level 4)
Voltage	30 V (10 s)
Test level 7	16.7 Hz 50 Hz 60 Hz (Test Level 4)
Voltage	300 V (1 s)
Comments	Criterion A

Attenuated oscillating wave

Standards/regulations	EN 61000-4-18
Input, output (test level 1)	100 kHz 1 MHz (Test Level 3 - symmetrical)
Voltage	1 kV
Input, output (test level 2)	10 MHz (Test Level 3 - asymmetrical)
Voltage	2 kV

Input, output (test level 3)	100 kHz 1 MHz (Test Level 3 - asymmetrical)
Voltage	2.5 kV
Signals (test level 1)	100 kHz 1 MHz (Test Level 3 - symmetrical)
Voltage	1 kV
Signals (test level 2)	100 kHz 1 MHz (Test Level 3 - asymmetrical)
Voltage	2.5 kV
Comments	Criterion A

Attenuated oscillating magnetic field

Standards/regulations	EN 61000-4-10
Test field strength	100 A/m
Test level 1	100 kHz
Test field strength	100 A/m
Test level 2	1 MHz
Comments	Criterion A

Criteria

Criterion A	Normal operating behavior within the specified limits.
Criterion B	Temporary impairment to operational behavior that is corrected by the device itself.
Criterion C	Temporary adverse effects on the operating behavior, which the device corrects automatically or which can be restored by actuating the operating elements.

Drawings

Schematic diagram

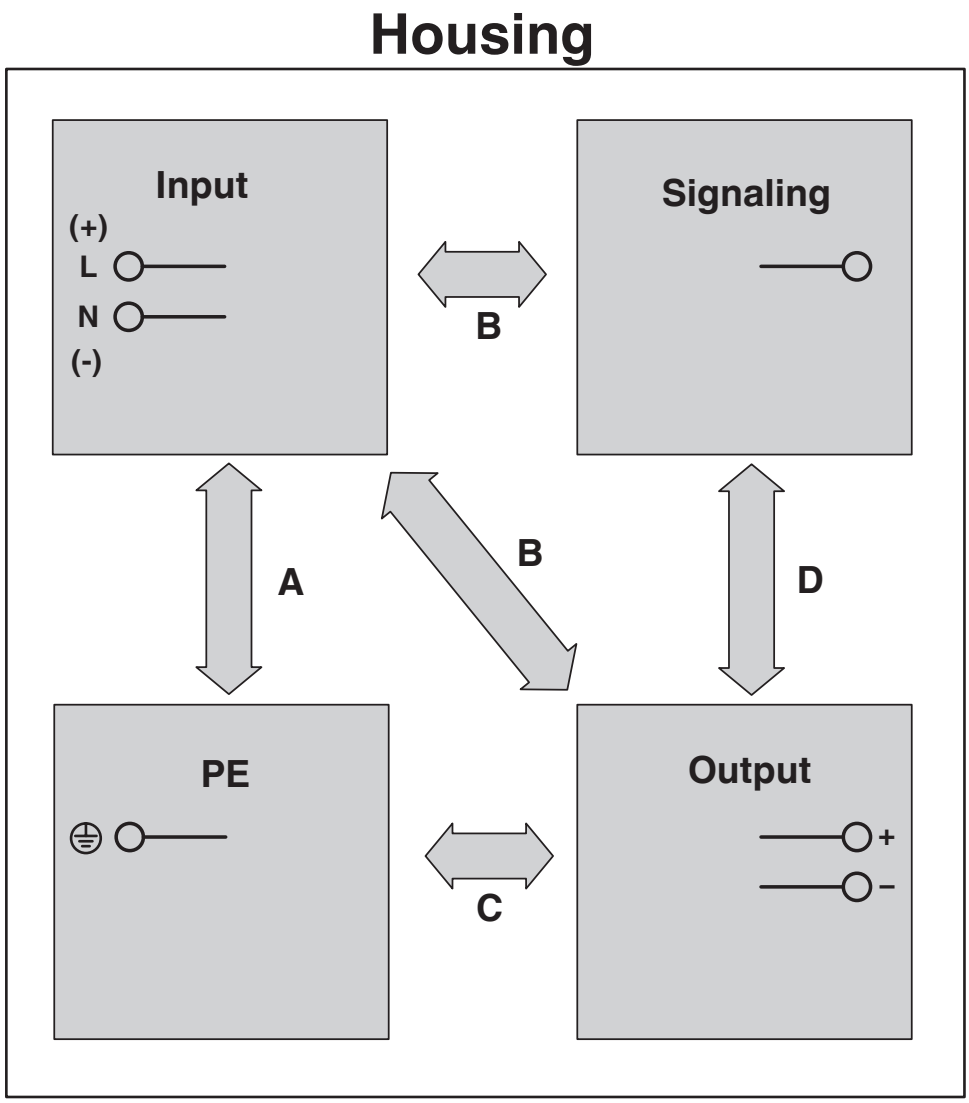

Diagram

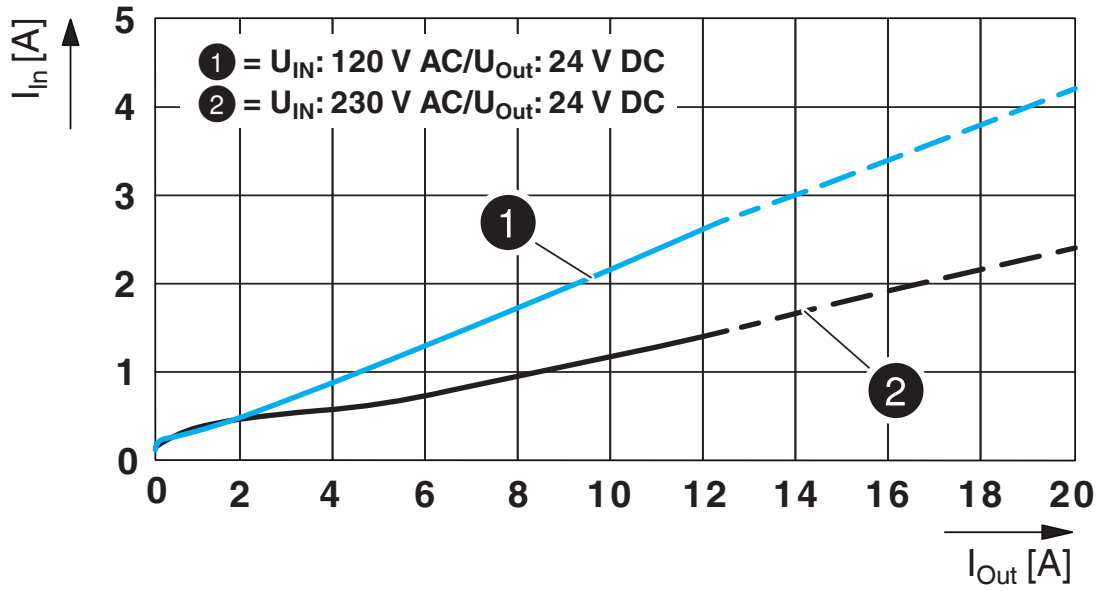

Input current/output current

Diagram

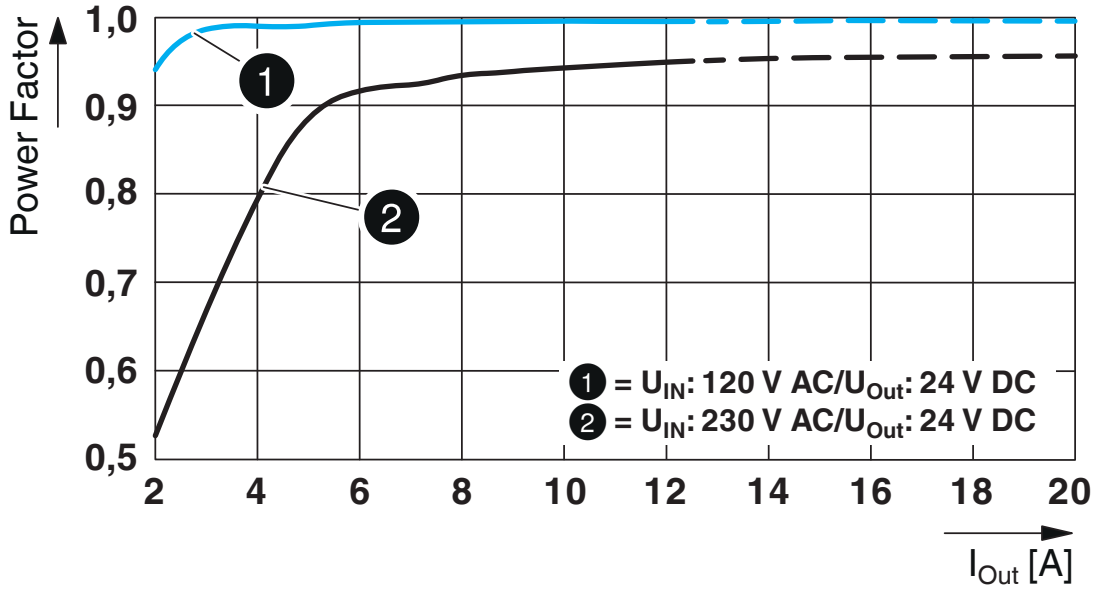

Power factor

Diagram

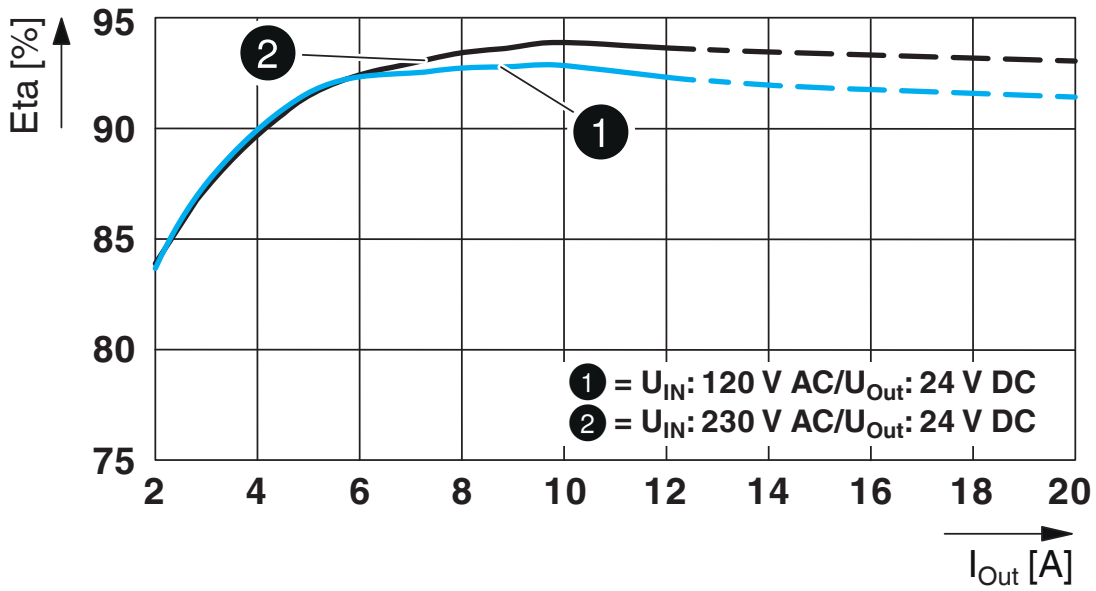

Efficiency

Block diagram

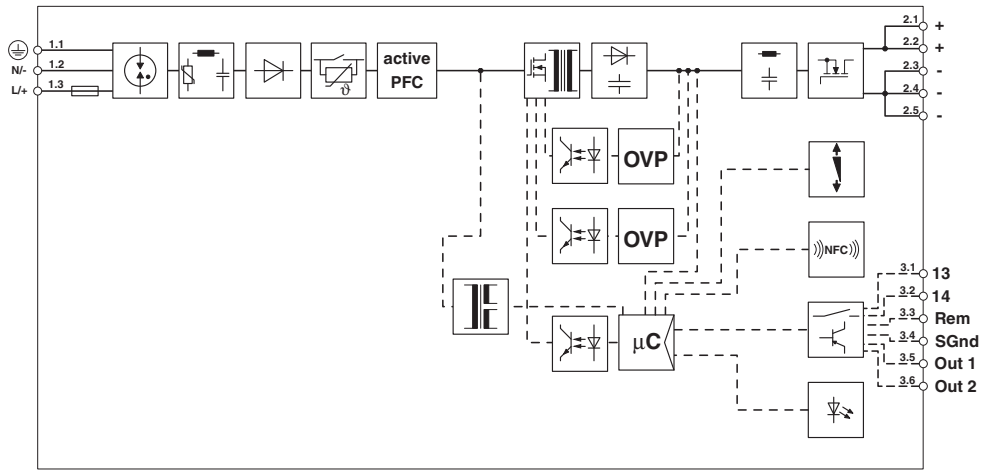

Block diagram

Approvals

To download certificates, visit the product detail page: https://www.phoenixcontact.com/us/products/2904616

DNV
Approval ID: TAA00001YD

cULus Listed
Approval ID: FILE E 123528

Type approved
Approval ID: SI-SIQ BG 005/108

LR
Approval ID: LR22472797TA

cCSAus
Approval ID: 80128434

BV
Approval ID: 44621/B1 BV

BIS Licence Document
Approval ID: R-41268801

SEMI F47
Approval ID: SEMI F47

CoC / Compliance Statement
Approval ID: 24PP124-01_0

ABS
Approval ID: 26-0442641-PDA

TUEV RH FS
Approval ID: 968/FSP 2884.00/25

IECEx
Approval ID: IECEx SIQ 22.0001X

ATEX
Approval ID: SIQ 22 ATEX 245 X

UKCA-EX
Approval ID: EXV22UKEX1334X

cULus Listed
Approval ID: FILE E 199827

CCC
Approval ID: 2022122303116030

INMETRO
Approval ID: DNV 24.0252 X

EAC Ex
Approval ID: KZ 7500525010102094

Classifications

ECLASS

ECLASS-13.0	27040701
ECLASS-15.0	27040701

ETIM

ETIM 10.0	EC002540

UNSPSC

UNSPSC 21.0	39121000

Environmental product compliance

EU RoHS

Fulfills EU RoHS substance requirements	Yes
Exemption	6(c), 7(a), 7(c)-I

China RoHS

Environment friendly use period (EFUP)	EFUP-25
	An article-related China RoHS declaration table can be found in the download area for the respective article under "Manufacturer declaration". For all articles with EFUP-E, no China RoHS declaration table issued and required.

EU REACH SVHC

REACH candidate substance (CAS No.)	Lead(CAS: 7439-92-1)
SCIP	13036d76-0847-4a71-85b7-1229aab84221

EF3.1 Climate Change

CO2e kg	22.481 kg CO2e

Phoenix Contact 2026 © - all rights reserved
https://www.phoenixcontact.com

Phoenix Contact USA
586 Fulling Mill Road
Middletown, PA 17057, United States
(+717) 944-1300
info@phoenixcon.com