# REL-IR2/L-120AC/2X21 - Single relay

2903667

https://www.phoenixcontact.com/us/products/2903667

Please be informed that the data shown in this PDF document is generated from our online catalog. Please find the complete data in the user documentation. Our general terms of use for downloads are valid.



Plug-in industrial relay with power contacts, 2 changeover contacts, test button, status LED, mechanical switching position indicator, input voltage: 120 V AC

## Commercial data

| | |
|---|---|
| Item number | 2903667 |
| Packing unit | 10 pc |
| Minimum order quantity | 10 pc |
| Sales key | C460 |
| Product key | DK6943 |
| GTIN | 4046356758208 |
| Weight per piece (including packing) | 35.6 g |
| Weight per piece (excluding packing) | 35.45 g |
| Customs tariff number | 85364900 |
| Country of origin | PL |

## Technical data

### Product properties

| | |
|---|---|
| Product type | Single relay |
| Set comprises | 2903311 RIF-2-RPT-LV-120AC/2X21 |
| Operating mode | 100% operating factor |
| Mechanical service life | approx. 2x $10^7$ cycles |

Insulation characteristics

| | |
|---|---|
| Insulation | Basic insulation |
| Overvoltage category | III |
| Pollution degree | 3 (Rated voltage of 230 V) |
| | 2 (Rated voltage of 400 V) |

Data management status

| | |
|---|---|
| Date of last data management | 01.04.2026 |

### Electrical properties

| | |
|---|---|
| Service life electrical | see diagram |
| Maximum power dissipation for nominal condition | 1.56 W |
| Test voltage (Winding/contact) | 2.5 $kV_{rms}$ (50 Hz, 1 min., winding/contact) |
| Test voltage (Contact/contact) | 2.5 $kV_{rms}$ (50 Hz, 1 min., contact/contact) |
| Test voltage (Changeover contact/changeover contact) | 2.5 $kV_{rms}$ (50 Hz, 1 min., changeover contact/changeover contact) |
| Rated insulation voltage | 250 V AC |
| Rated surge voltage | 4 kV |

### Input data

Coil side

| | |
|---|---|
| Nominal input voltage $U_N$ | 120 V AC |
| Input voltage range | 93.6 V AC ... 165.6 V AC |
| Input voltage range in reference to $U_N$ | see diagram |
| Mains frequency | 50/60 Hz |
| Drive and function | monostable |
| Drive (polarity) | non-polarized |
| Typical input current at $U_N$ | 13 mA |
| Typical response time | 5 ms ... 15 ms (depending on phase relation) |
| Typical release time range | 5 ms ... 20 ms (depending on phase relation) |
| Status display | LED (yellow) |

### Output data

Switching

| | |
|---|---|
| Contact switching type | 2 changeover contacts |
| Type of switch contact | Single contact |

| | |
|---|---|
| Contact material | AgNi |
| Maximum switching voltage | 250 V AC/DC |
| Minimum switching voltage | 5 V (At 24 mA) |
| Limiting continuous current | 12 A |
| Maximum inrush current | 30 A (20 ms, N/O contacts) |
| Min. switching current | 5 mA (at 24 V) |
| Interrupting rating (ohmic load) max. | 288 W (at 24 V DC) |
| | 124 W (at 48 V DC) |
| | 108 W (at 60 V DC) |
| | 52 W (at 110 V DC) |
| | 48 W (at 220 V DC) |
| | 3000 VA (for 250 V AC) |
| Switching power min. | 0.12 W |
| Motor load according to UL 508 | 1/2 HP, 240 V AC |

## Connection data

| | |
|---|---|
| Connection method | Plug-in connection |

## Dimensions

| | |
|---|---|
| Width | 21.2 mm |
| Height | 27.5 mm |
| Depth | 35.6 mm |

## Environmental and real-life conditions

### Ambient conditions

| | |
|---|---|
| Degree of protection | RT I |
| Ambient temperature (operation) | -40 °C ... 55 °C |
| Ambient temperature (storage/transport) | -40 °C ... 85 °C |

## Approvals

### Corrosive gas test

| | |
|---|---|
| Identification | ISA-S71.04. G3 Harsh Group |
| | EN 60068-2-60 |

## Standards and regulations

| | |
|---|---|
| Standards/regulations | IEC 60664 |
| | IEC 61810 |

## Mounting

| | |
|---|---|
| Mounting position | any |

## Drawings

Diagram

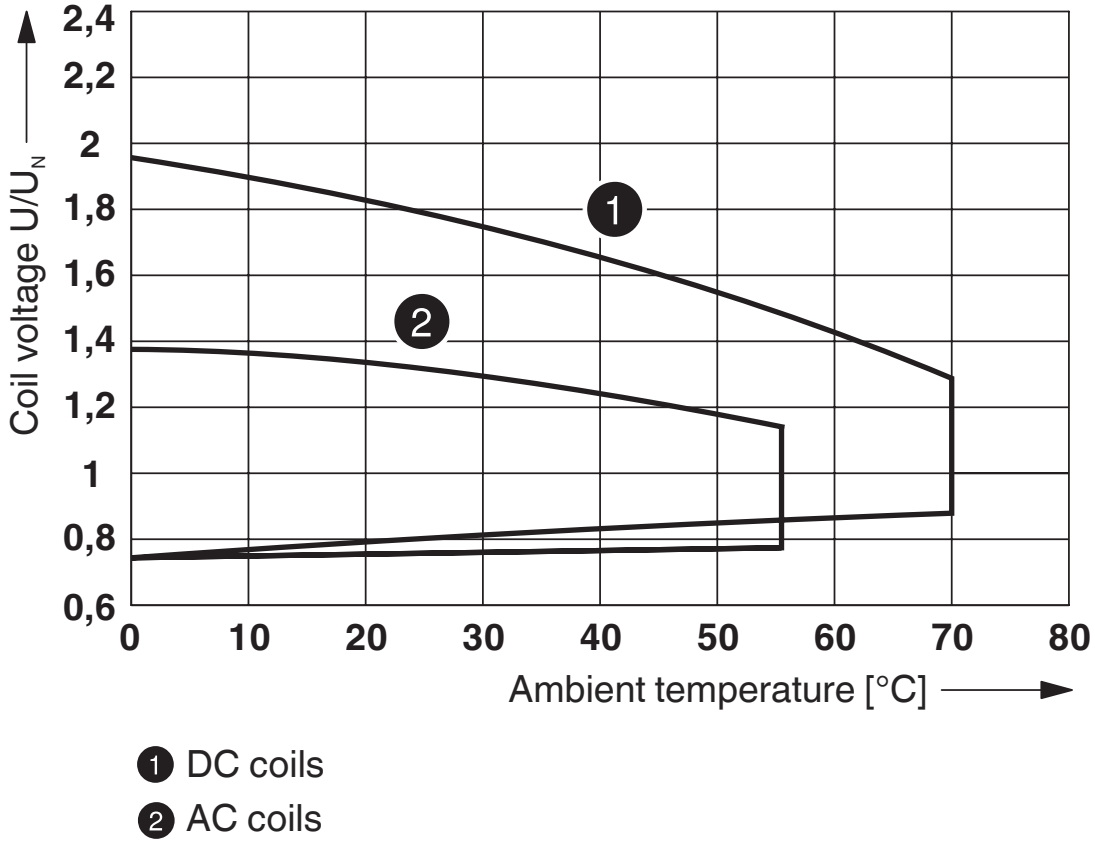


1 DC coils

2 AC coils

Operating voltage range

Diagram

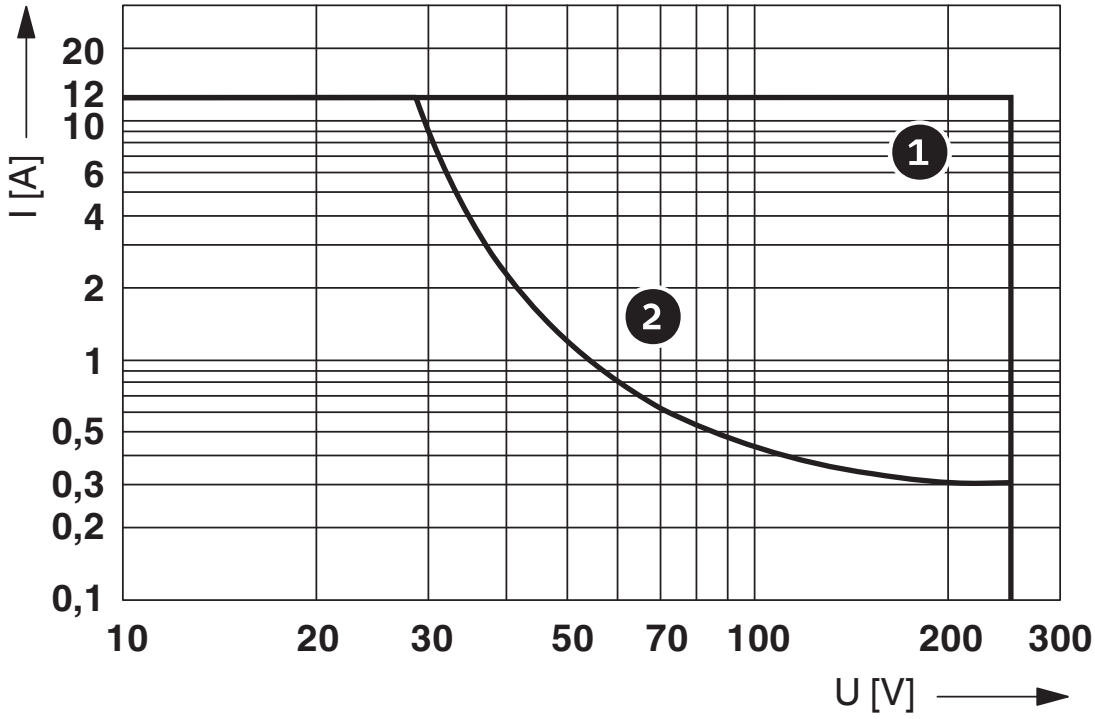


Interrupting rating
Curve 1: AC, ohmic load
Curve 2: DC, ohmic load

Diagram

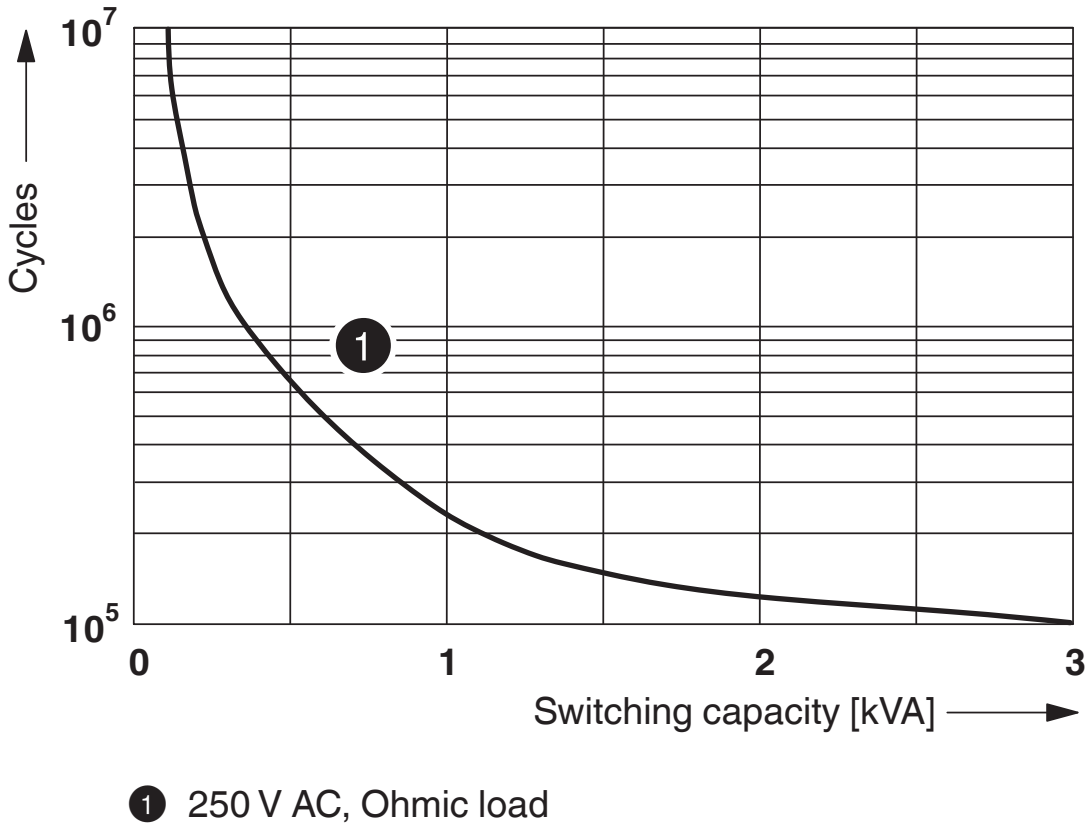


1 250 V AC, Ohmic load

Electrical service life

Diagram

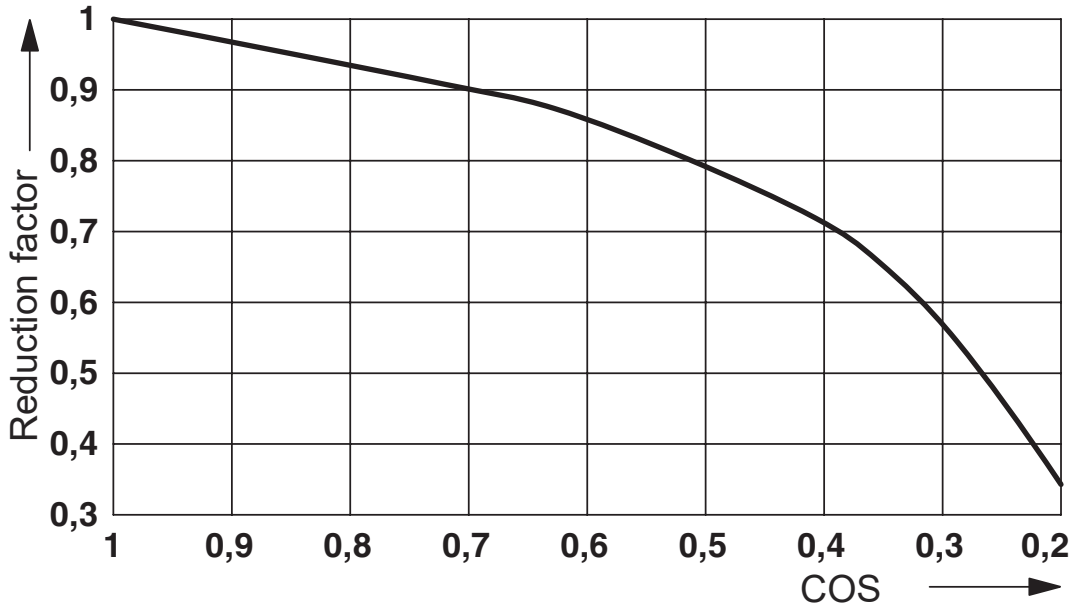


Service life reduction factor

Diagram

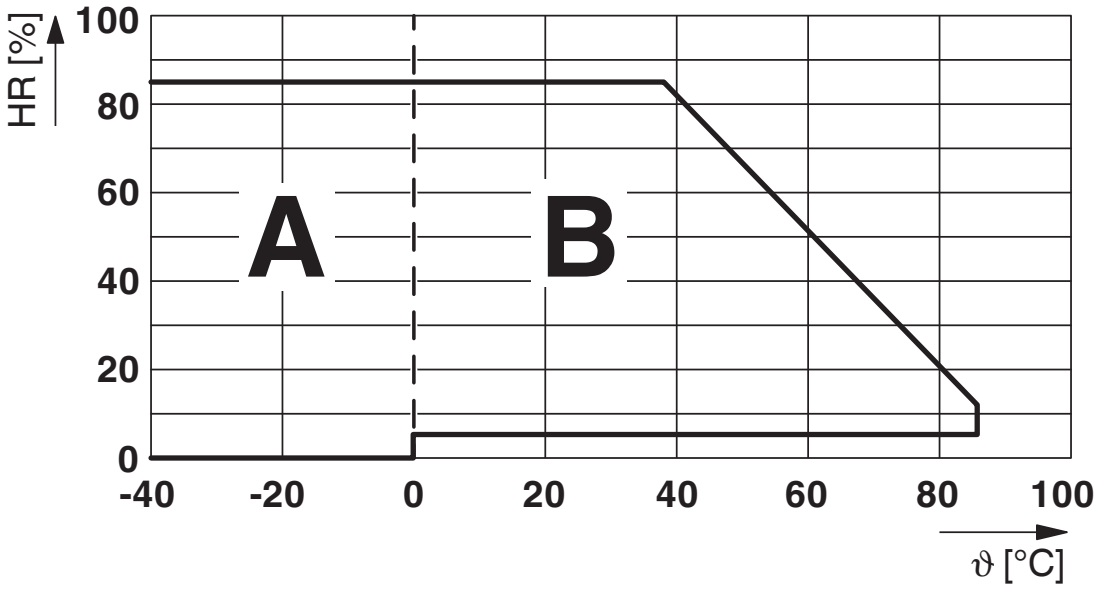


Permissible humidity for operation and storage.
The maximum permissible ambient temperature as specified in the data sheet must be observed.

Area A: Ice buildup at ambient temperatures ≤ 0°C must be prevented
Area B: Condensation at ambient temperatures > 0°C must be prevented

On 30 full days that are naturally distributed across an entire year, a humidity level of 95% is permissible at an ambient temperature ≤ 25°C.

Circuit diagram

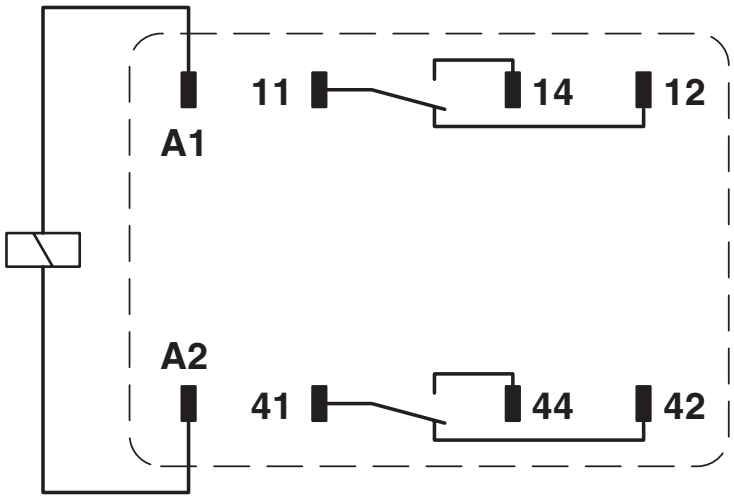

## Approvals

To download certificates, visit the product detail page: https://www.phoenixcontact.com/us/products/2903667

**CSA**
Approval ID: 256725

**VDE Zeichengenehmigung**
Approval ID: 40040427

**cULus Recognized**
Approval ID: E172140

## Classifications

### ECLASS

| | |
|---|---|
| ECLASS-13.0 | 27371601 |
| ECLASS-15.0 | 27371601 |

### ETIM

| | |
|---|---|
| ETIM 10.0 | EC001437 |

### UNSPSC

| | |
|---|---|
| UNSPSC 21.0 | 39122300 |

## Environmental product compliance

EU RoHS

| | |
|---|---|
| Fulfills EU RoHS substance requirements | Yes, No exemptions |

China RoHS

| | |
|---|---|
| Environment friendly use period (EFUP) | EFUP-E |
| | No hazardous substances above the limits |

EU REACH SVHC

| | |
|---|---|
| REACH candidate substance (CAS No.) | No substance above 0.1 wt% |


Phoenix Contact 2026 © - all rights reserved
https://www.phoenixcontact.com



Phoenix Contact USA
586 Fulling Mill Road
Middletown, PA 17057, United States
(+717) 944-1300
info@phoenixcon.com