TC ANT MOBILE/GPS - Antenna

2903590

https://www.phoenixcontact.com/us/products/2903590

Please be informed that the data shown in this PDF document is generated from our online catalog. Please find the complete data in the user documentation. Our general terms of use for downloads are valid.



Combined cellular GPS antenna with omnidirectional characteristic, 2 m antenna cable with SMA round plug (GSM/UMTS) and R-SMA round plug (GPS)

Commercial data

Item number	2903590
Packing unit	1 pc
Minimum order quantity	1 pc
Sales key	DN23
Product key	DNC4Z1
GTIN	4046356757546
Weight per piece (including packing)	133.6 g
Weight per piece (excluding packing)	126.8 g
Customs tariff number	85177100
Country of origin	DE

Technical data

Notes

Note on application

Note on application	Only for industrial use

Product properties

Product type	Antenna
Radiation characteristics	Omnidirectional
Gain	5 dBi (800/900 MHz)
	3 dBi (1800/1900 MHz)
	1 dBi (2100 MHz)
	25 dBi (GPS)
Polarization	Linear vertical

Electrical properties

Frequency band	900 MHz
	1900 MHz
	1800 MHz
	850 MHz
	2100 MHz
Frequency range	800 MHz ... 900 MHz
	1.8 GHz ... 1.9 GHz
	2.1 GHz
Impedance	50 Ω
Maximum capacity	10.00 W
Voltage standing wave ratio VSWR in a 50 Ω system	< 1.50

Connection data

Connection technology

Connection method	SMA (male)

Dimensions

Height	23 mm
Diameter	76 mm

Material specifications

Color	black (RAL 9005)
Material (Cable)	RG174 (Outer cable sheath)

Cable/line

Cable length	2.00 m
Connecting cable	yes

External cable diameter	2.70 mm
Smallest bending radius, fixed installation	15 mm

Environmental and real-life conditions

Ambient conditions

Degree of protection	IP69K (Assembled)
Ambient temperature (operation)	-40 °C ... 85 °C
Ambient temperature (storage/transport)	-40 °C ... 85 °C

Mounting

Mounting type	Control cabinet

Drawings

Schematic diagram

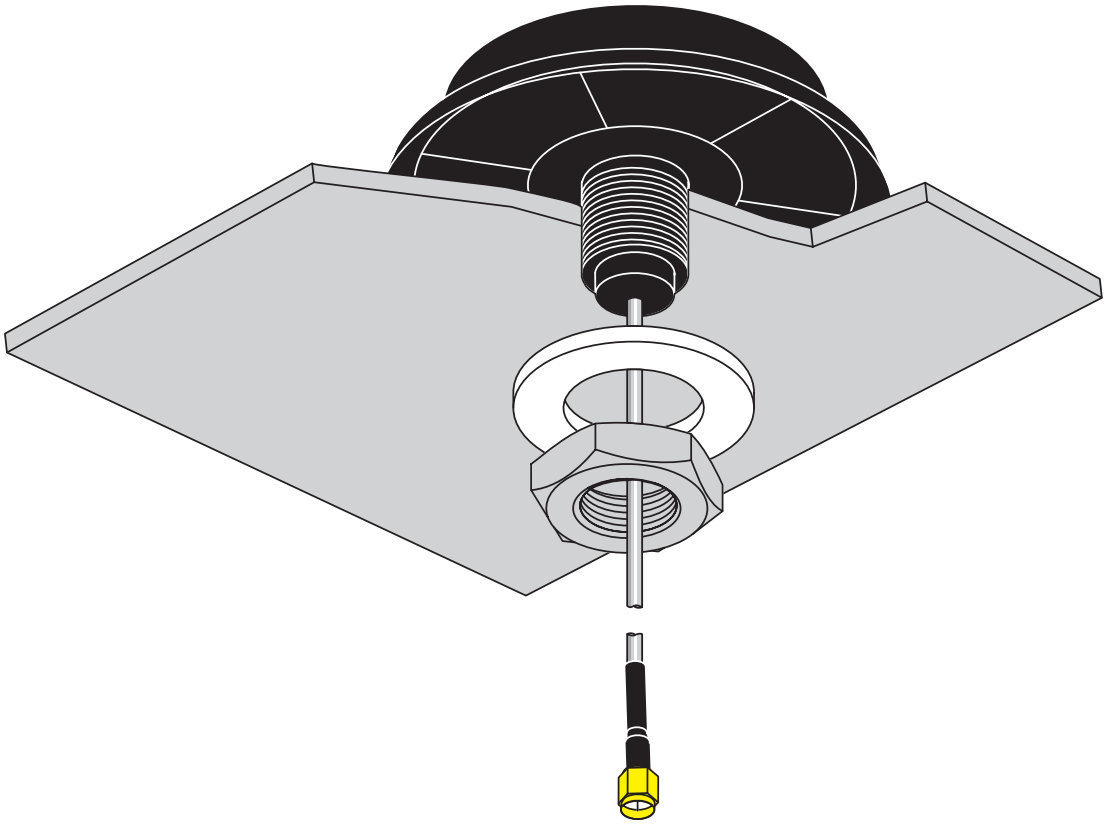

Mounting on the control cabinet

Classifications

ECLASS

ECLASS-13.0	19070105

ETIM

ETIM 9.0	EC001698

UNSPSC

UNSPSC 21.0	43223100

Environmental product compliance

EU RoHS

Fulfills EU RoHS substance requirements	Yes
Exemption	6(c)

China RoHS

Environment friendly use period (EFUP)	EFUP-E
	No hazardous substances above the limits

EU REACH SVHC

REACH candidate substance (CAS No.)	No substance above 0.1 wt%

Phoenix Contact 2026 © - all rights reserved
https://www.phoenixcontact.com

Phoenix Contact USA
586 Fulling Mill Road
Middletown, PA 17057, United States
(+717) 944-1300
info@phoenixcon.com