DFLK-D 9 SUB/M/FKCT - Termination board

2903052

https://www.phoenixcontact.com/us/products/2903052

Please be informed that the data shown in this PDF document is generated from our online catalog. Please find the complete data in the user documentation. Our general terms of use for downloads are valid.



The VARIOFACE feed-through module implements a 1:1 connection between plug-in push-in spring-cage connection terminal blocks and a D-SUB miniature pin strip (number of positions: 9). A separate ground pick-off is available.

Commercial data

Item number	2903052
Packing unit	1 pc
Minimum order quantity	1 pc
Note	Made to order (non-returnable)
Sales key	C422
Product key	DK21C2
GTIN	4046356709606
Weight per piece (including packing)	63 g
Weight per piece (excluding packing)	63 g
Customs tariff number	85369010
Country of origin	DE

Technical data

Product properties

Product type	Interface module
Product family	VARIOFACE
Number of positions	9

Insulation characteristics: Air clearances and creepage distances

Insulation	Functional insulation
Overvoltage category	II
Pollution degree	2

Electrical properties

Operating voltage (AC)	≤ 30 V AC
Operating voltage (DC)	≤ 60 V DC
Current (per branch)	≤ 2.5 A
Current (Total current)	≤ 22.5 A (50 °C)

Air clearances and creepage distances

Rated insulation voltage	125 V
Rated surge voltage	1.2 kV (1.2/50 µs)

Connection data

Connection 1 (control level)

Connection in acc. with standard	IEC 60807-2
Connection method	D-SUB pin strip
Screw thread	UNC 4-40
Number of connections	1
Number of positions	9
Insertion/withdrawal cycles	> 500
Pitch	2.74 mm

Connection 2 (field level)

Connection method	Push-in spring connection
Stripping length	10 mm
Number of positions	10
Conductor cross-section rigid	0.2 mm² ... 2.5 mm²
Conductor cross-section flexible	0.2 mm² ... 2.5 mm²
	0.25 mm² ... 2.5 mm² (Ferrule without plastic sleeve)
	0.25 mm² ... 2.5 mm² (Ferrule with plastic sleeve)
Conductor cross-section flexible (2 conductors with same cross section)	0.5 mm² ... 1.5 mm² (TWIN ferrule with plastic sleeve)
Conductor cross-section AWG	24 ... 12
Pitch	5 mm

Signaling

Status display present	no

Dimensions

Item dimensions

Width	38 mm
Height	58.4 mm
Depth	46 mm

Material specifications

Color	gray (RAL 7042)
Housing insulation material	Polyamide PA non-reinforced

Environmental and real-life conditions

Ambient conditions

Degree of protection (Module)	IP20
Degree of protection (Installation location)	≥ IP54
Ambient temperature (operation)	-20 °C ... 50 °C
Ambient temperature (storage/transport)	-20 °C ... 70 °C
Altitude	≤ 2000 m

Approvals

UKCA

Certificate	UKCA-compliant

Standards and regulations

Air clearances and creepage distances

Standards/regulations	EN IEC 60664-1

Mounting

Mounting type	Rear mounting
Mounting position	any

Notes

Notes on operation	For proper use, the specifications of the installation directive (see Downloads) must be observed. For applications or use with third-party products, the specifications, and the safety and warning instructions of the respective third-party manufacturer must also be met.

Drawings

Dimensional drawing

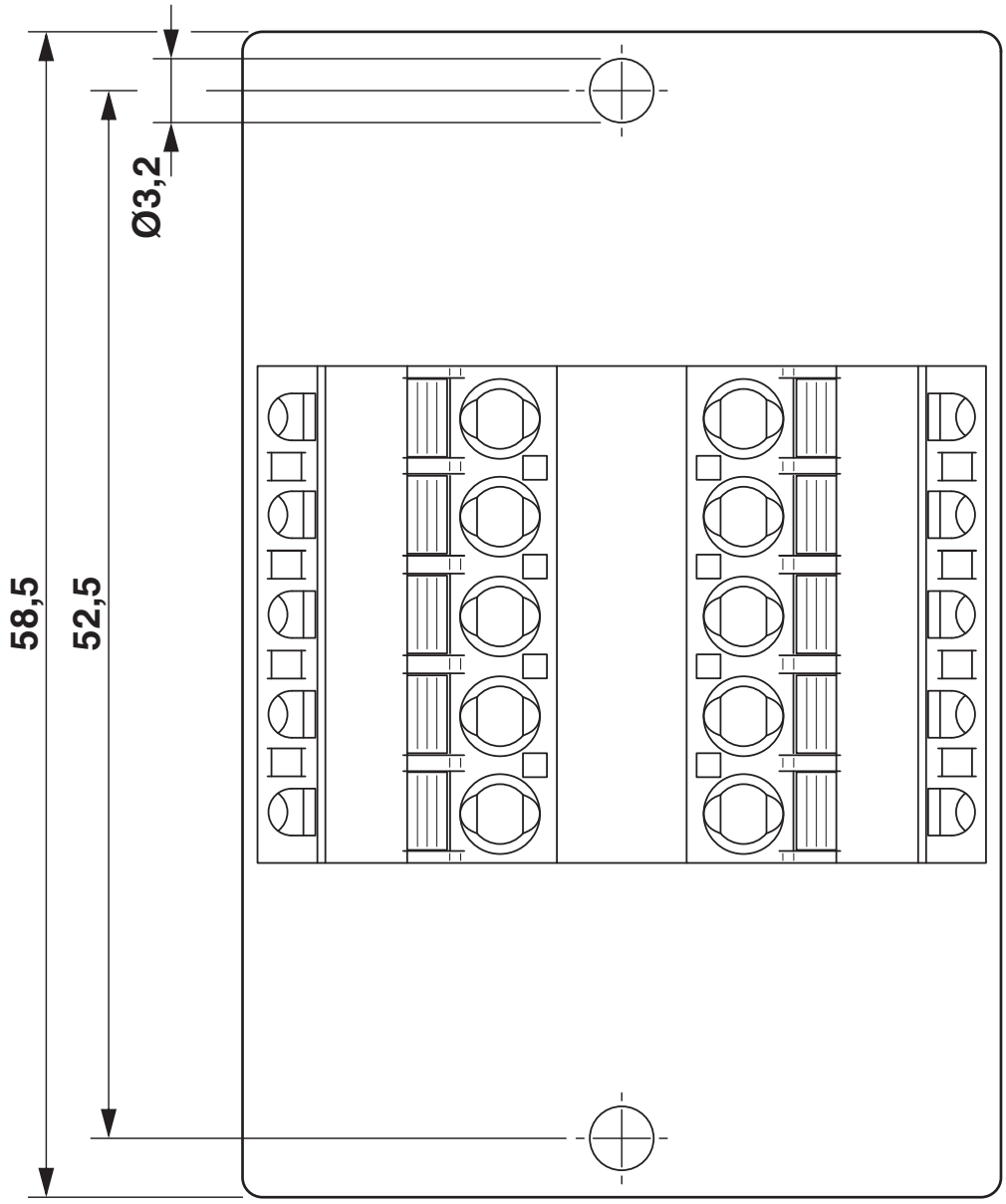

Dimensional drawing

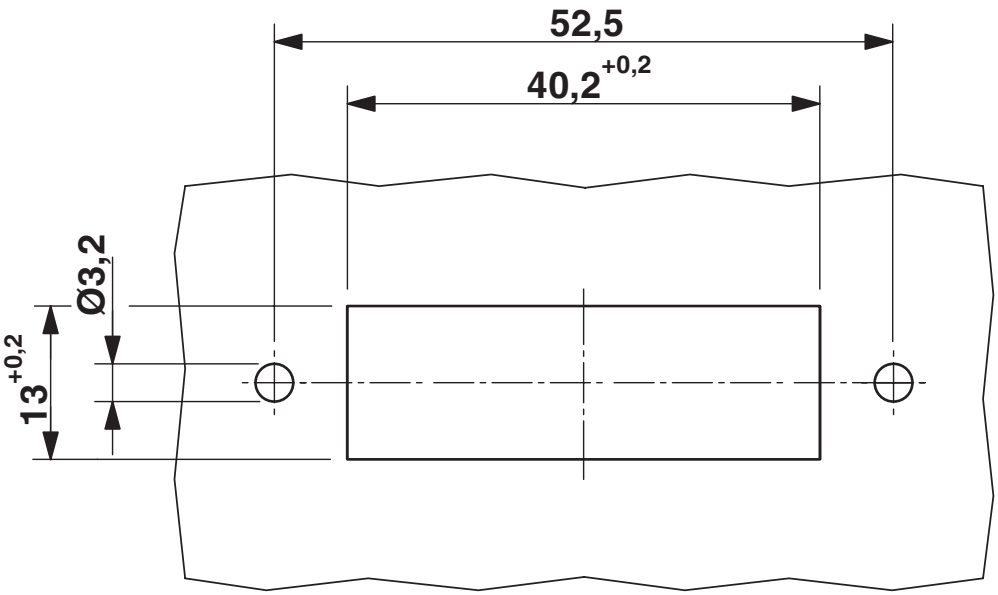

Dimensional drawing

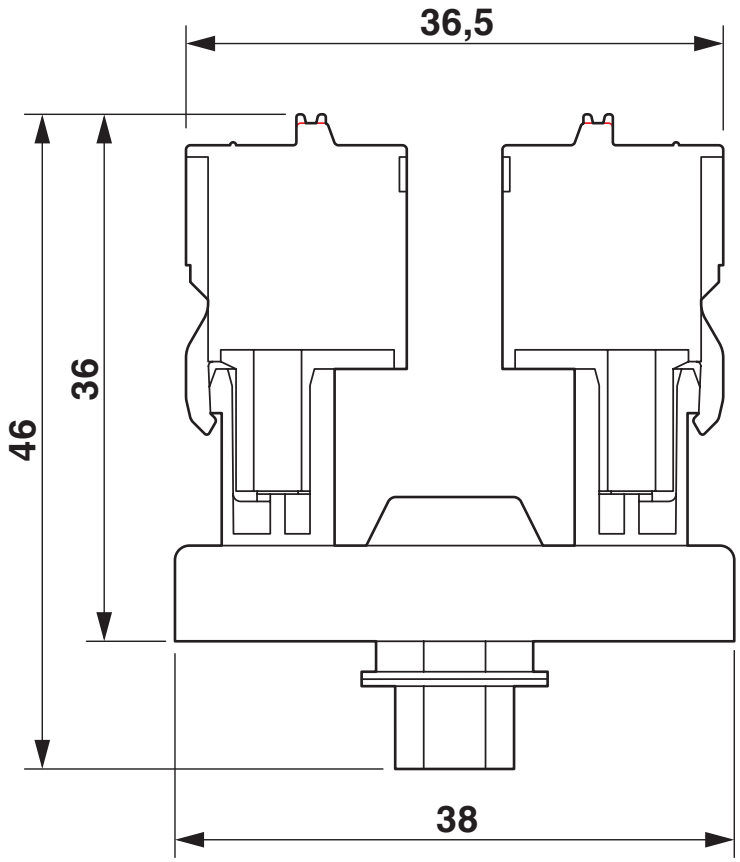

Approvals

To download certificates, visit the product detail page: https://www.phoenixcontact.com/us/products/2903052

cUL Recognized
Approval ID: E238705

	Nominal voltage U_N	Nominal current I_N	Cross section AWG	Cross section mm^2
keine				
	125 V	1 A	30 - 12	-

UL Recognized
Approval ID: E238705

	Nominal voltage U_N	Nominal current I_N	Cross section AWG	Cross section mm^2
keine				
	125 V	1 A	30 - 12	-

Classifications

ECLASS

ECLASS-13.0	27141152
ECLASS-15.0	27141152

ETIM

ETIM 10.0	EC002780

UNSPSC

UNSPSC 21.0	39121400

Environmental product compliance

EU RoHS

Fulfills EU RoHS substance requirements	Yes, No exemptions

China RoHS

Environment friendly use period (EFUP)	EFUP-E
	No hazardous substances above the limits

EU REACH SVHC

REACH candidate substance (CAS No.)	No substance above 0.1 wt%

EF3.1 Climate Change

CO2e kg	0.698 kg CO2e

Phoenix Contact 2026 © - all rights reserved
https://www.phoenixcontact.com

Phoenix Contact USA
586 Fulling Mill Road
Middletown, PA 17057, United States
(+717) 944-1300
info@phoenixcon.com