PLC-OPT- 24DC/ 5DC/100KHZ-G - Solid-state relay module

2902972

https://www.phoenixcontact.com/us/products/2902972

Please be informed that the data shown in this PDF document is generated from our online catalog. Please find the complete data in the user documentation. Our general terms of use for downloads are valid.



Input solid-state relay, with DC voltage output push-pull, transmission frequency: 100 kHz, with light indicator and protective circuit in input and output circuits, input: 24 V DC, output: 4 - 18 V DC/50 mA

Commercial data

Item number	2902972
Packing unit	1 pc
Minimum order quantity	1 pc
Sales key	C461
Product key	DK62A3
GTIN	4046356702805
Weight per piece (including packing)	34.5 g
Weight per piece (excluding packing)	32.86 g
Customs tariff number	85364190
Country of origin	DE

Technical data

Product properties

Product type	Solid-state relay module
Product family	PLC-INTERFACE
Application	100 kHz input optocoupler
Operating mode	100% operating factor

Insulation characteristics: Air clearances and creepage distances between the power circuits

Insulation	Basic insulation
Overvoltage category	II
Pollution degree	2

Data management status

Date of last data management	01.04.2026

Electrical properties

Maximum power dissipation for nominal condition	0.19 W
Test voltage (Input/output)	2.5 kV_{rms} (50 Hz, 1 min., input/output)

Air clearances and creepage distances between the power circuits

Rated insulation voltage	50 V DC
Rated surge voltage	0.5 kV

Input data

Nominal input voltage U_N	24 V DC
Input voltage range in reference to U_N	0.8 ... 1.2
Input voltage range	19.2 V DC ... 28.8 V DC
Switching threshold "0" signal in reference to U_N	< 0.4
Switching threshold "1" signal in reference to U_N	> 0.8
Typical input current at U_N	8 mA
Typical response time	1 µs
Typical turn-off time	2 µs
Operating voltage display	Yellow LED
Protective circuit	Reverse polarity protection
	Surge protection
Surge voltage protection	> 33 V
Transmission frequency	100 kHz

Output data

Output data

Contact switching type	1 N/O contact
Design of digital output	electronic
Output voltage range	4 V DC ... 18 V DC

Limiting continuous current	50 mA
Quiescent current	8.5 mA
Surge voltage protection	> 35 V
Voltage drop at max. limiting continuous current	< 1.2 V
Output circuit	3-conductor push-pull, ground referenced
Protective circuit	Reverse polarity protection
	Surge protection

Connection data

Connection method	Push-in connection
Stripping length	10 mm
Conductor cross-section rigid	0.14 mm² ... 2.5 mm²
Conductor cross-section flexible	0.14 mm² ... 2.5 mm²
	0.2 mm² ... 2.5 mm² (Single ferrule)
	2x 0.5 mm² ... 1 mm² (TWIN ferrule)
Conductor cross-section AWG	26 ... 14

Dimensions

Item dimensions

Width	6.2 mm
Height	80 mm
Depth	94 mm

Material specifications

Color	gray (RAL 7042)

Environmental and real-life conditions

Ambient conditions

Degree of protection	IP20
Ambient temperature (operation)	-20 °C ... 60 °C
Ambient temperature (storage/transport)	-25 °C ... 75 °C

Approvals

Corrosive gas test

Identification	ISA-S71.04. G3 Harsh Group
	EN 60068-2-60

Standards and regulations

Air clearances and creepage distances between the power circuits

Standards/regulations	IEC 60947-5-1

Mounting

Mounting type	DIN rail mounting

Assembly note	in rows with zero spacing
Mounting position	any

Drawings

Circuit diagram

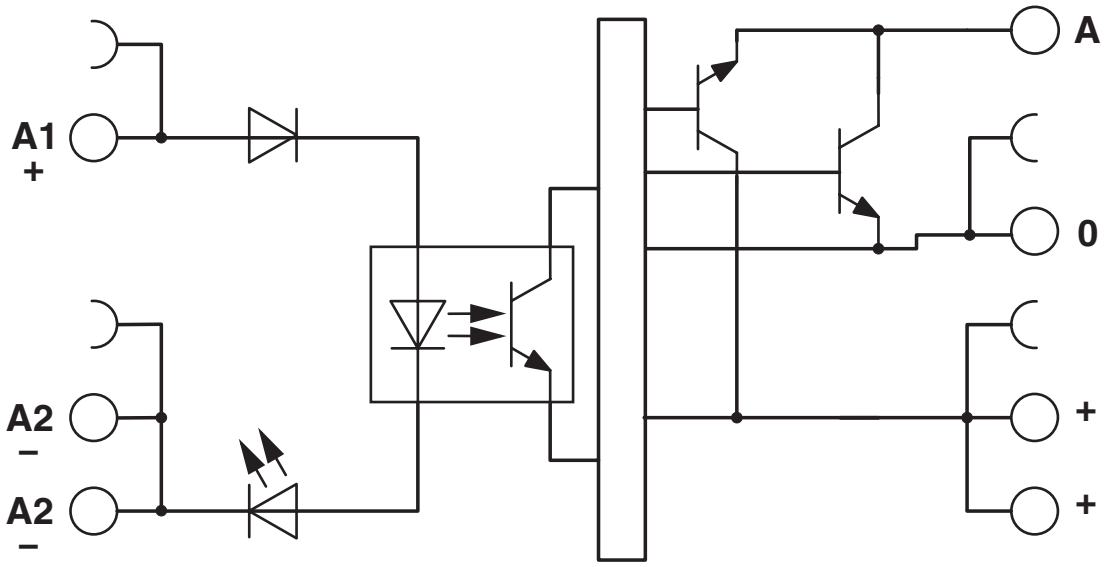

Approvals

To download certificates, visit the product detail page: https://www.phoenixcontact.com/us/products/2902972

cULus Listed
Approval ID: E140324

cULus Listed
Approval ID: E140324

cULus Listed
Approval ID: E140324

Classifications

ECLASS

ECLASS-13.0	27371604
ECLASS-15.0	27371604

ETIM

ETIM 10.0	EC001504

UNSPSC

UNSPSC 21.0	39122300

Environmental product compliance

EU RoHS

Fulfills EU RoHS substance requirements	Yes
Exemption	7(a), 7(c)-I

China RoHS

Environment friendly use period (EFUP)	EFUP-50
	An article-related China RoHS declaration table can be found in the download area for the respective article under "Manufacturer declaration". For all articles with EFUP-E, no China RoHS declaration table issued and required.

EU REACH SVHC

REACH candidate substance (CAS No.)	Lead(CAS: 7439-92-1)
SCIP	db8cfc65-9be4-4f01-b771-56188a871356

EF3.1 Climate Change

CO2e kg	2.214 kg CO2e

Phoenix Contact 2026 © - all rights reserved
https://www.phoenixcontact.com

Phoenix Contact USA
586 Fulling Mill Road
Middletown, PA 17057, United States
(+717) 944-1300
info@phoenixcon.com