MINI MCR-2-V8-FLK 16 - System adapter

2901993

https://www.phoenixcontact.com/us/products/2901993

Please be informed that the data shown in this PDF document is generated from our online catalog. Please find the complete data in the user documentation. Our general terms of use for downloads are valid.

CRA-READY



Eight MINI Analog Pro signal conditioners and measuring transducers can be connected to a controller with minimal cabling effort and without any errors using system adapters and system cabling.

Product description

Thanks to its innovative plug-in concept, the system adapter offers a time-saving wiring solution. Eight MINI Analog Pro-signal converters are easily connected to a control unit using pluggable system cabling. This leads to a considerable reduction in cabling effort and the risk of wiring errors, compared to PLC-side single-conductor wiring.

Commercial data

Item number	2901993
Packing unit	1 pc
Minimum order quantity	1 pc
Sales key	C404
Product key	DK112Z
GTIN	4046356651813
Weight per piece (including packing)	142 g
Weight per piece (excluding packing)	132.6 g
Customs tariff number	85389099
Country of origin	DE

Technical data

Product properties

Product type	Interface module
Product family	MINI Analog Pro

Insulation characteristics: GB Standard

Overvoltage category	II
Pollution degree	2

Electrical properties

Rated insulation voltage	50 V_{rms}
Test voltage (Input/output)	0.5 kV

Input data

Signal

Number of inputs	8
Configurable/programmable	no
Max. voltage input signal	30 V
Max. current input signal	4 A (500 mA per ch.)

Output data

Number of outputs	8
Configurable/programmable	no

Connection data

Output

Connection method	IDC/FLK pin strip
Number of positions	16
Pitch	2.54 mm

Ex data

Ex installation (EPL)	Gc
	Div. 2

Dimensions

Width	51.1 mm
Height	104.1 mm
Depth	56.8 mm

Material specifications

Color	gray (RAL 7042)
Housing material	PBT 7 % GF V0

Environmental and real-life conditions

Ambient conditions

Degree of protection	IP20 (Finger safety)
Ambient temperature (operation)	-40 °C ... 70 °C
Ambient temperature (storage/transport)	-40 °C ... 70 °C
Permissible humidity (operation)	5 % ... 95 %
Permissible humidity (storage/transport)	5 % ... 95 %

Altitude range (≤ 2000 m)

Altitude	≤ 2000 m
Ambient temperature (operation)	-40 °C ... 70 °C
Rated insulation voltage	50 V AC/DC

Altitude range (≤ 3000 m)

Height range	> 2000 m ... 3000 m
Ambient temperature (operation)	-40 °C ... 63 °C
Rated insulation voltage	40 V AC/DC

Altitude range (≤ 4000 m)

Height range	> 3000 m ... 4000 m
Ambient temperature (operation)	-40 °C ... 56 °C
Rated insulation voltage	30 V AC/DC

Altitude range (≤ 5000 m)

Height range	> 4000 m ... 5000 m
Ambient temperature (operation)	-40 °C ... 49 °C
Rated insulation voltage	30 V AC/DC

Approvals

CE

Certificate	CE-compliant

ATEX

Identification	Ⓔx II 3 G Ex ec IIC Gc
Certificate	PxCIF16ATEX2901993U

UKCA Ex (UKEX)

Identification	Ⓔx II 3 G Ex ec IIC Gc
Certificate	PxCIF22UKEX2901993U

IECEx

Identification	Ex ec IIC Gc
Certificate	IECEx BVS 22.0005U

CCC / China-Ex

Identification	Ex ec IIC Gc

Certificate	2022122308115723

UL, USA/Canada

Identification	UL 61010 Listed
	Class I, Div. 2, Groups A, B, C, D T5
	Class I, Zone 2, Group IIC T5

EAC Ex

Identification	Ex nA IIC T4 Gc U
Certificate	BY/112 02.01 TP012 103.01 00081

Standards and regulations

GB Standard

Standards/regulations	GB 3836.1
	GB 3836.3

Mounting

Mounting position	any

Notes

Note on application

Note on application	As things stand now, we are preparing the product so that, as of December 11, 2027, it will comply with the requirements of the EU Cyber Resilience Act (CRA) based on the information currently available regarding the CRA.

Utilization restriction

EMC note	EMC: class A product, see manufacturer's declaration in the download area

Drawings

Block diagram

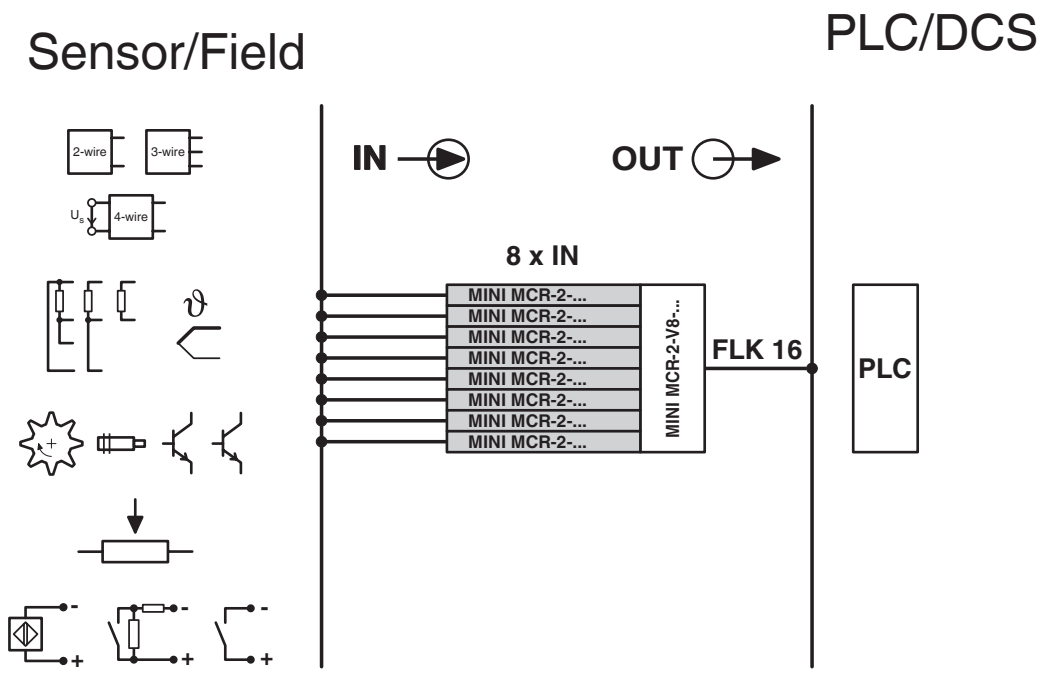

Approvals

To download certificates, visit the product detail page: https://www.phoenixcontact.com/us/products/2901993

UL Listed
Approval ID: E238705

cUL Listed
Approval ID: E238705

CCC
Approval ID: 2022122308115723

cUL Listed
Approval ID: E196811

UL Listed
Approval ID: E196811

IECEx
Approval ID: IECEx BVS 22.0005U

Classifications

ECLASS

ECLASS-13.0	27141152
ECLASS-15.0	27141152

ETIM

ETIM 10.0	EC002780

UNSPSC

UNSPSC 21.0	39121400

Environmental product compliance

EU RoHS

Fulfills EU RoHS substance requirements	Yes, No exemptions

China RoHS

Environment friendly use period (EFUP)	EFUP-E
	No hazardous substances above the limits

EU REACH SVHC

REACH candidate substance (CAS No.)	No substance above 0.1 wt%

Phoenix Contact 2026 © - all rights reserved
https://www.phoenixcontact.com

Phoenix Contact USA
586 Fulling Mill Road
Middletown, PA 17057, United States
(+717) 944-1300
info@phoenixcon.com