RAD-900-IFS - Wireless module

2901540

https://www.phoenixcontact.com/us/products/2901540

Please be informed that the data shown in this PDF document is generated from our online catalog. Please find the complete data in the user documentation. Our general terms of use for downloads are valid.



Radioline - 900 MHz wireless transceiver with RS-232/485 interface, can be extended with I/O modules, RSMA (female) antenna connection, point-to-point, star, and mesh networks up to 250 stations, range of up to 32 km (line of sight), use in North America

Product description

Radioline is the new wireless system for large systems. Special features include extremely easy assignment of inputs and outputs by simply turning the thumbwheel - without any programming. Radioline transmits I/O signals (I/O mode) or serial data (serial mode) and is therefore very versatile. Alternatively, I/O signals can now also be connected to controllers directly using the Modbus protocol (PLC/Modbus RTU mode).
In addition, you can implement various network structures: from a simple point-to-point connection to complex mesh networks. Thanks to the latest Trusted Wireless technology, Radioline is the ideal choice for industrial use.

Your advantages

- Quick and easy startup without programming
- High degree of reliability due to Trusted Wireless technology (AES encryption, frequency hopping method, and coexistence management)
- Mesh networks of up to 250 devices
- Extended temperature range of -40 °C … +70 °C
- Range of several kilometers thanks to adjustable data rates for the wireless interface
- Integrated RS-232/RS-485 interface

ELEKTROGERÄTE RÜCKNAHME

Commercial data

Item number	2901540
Packing unit	1 pc
Minimum order quantity	1 pc
Sales key	DN26
Product key	DNC611

GTIN	4046356610209
Weight per piece (including packing)	320.8 g
Weight per piece (excluding packing)	180 g
Customs tariff number	85176200
Country of origin	US

Technical data

Notes

Trade restriction

CE note	The products are offered exclusively for export outside the EU and the European Economic Area.

Product properties

Product type	Wireless module
Operating mode	PLC / Modbus RTU dual mode (Activation and configuration via PSI-CONF software)
MTTF	20.4 Years

Insulation characteristics

Overvoltage category	II
Degree of pollution	2

Electrical properties

Transient surge protection	yes

Supply

Supply voltage	24 V DC
Supply voltage range	10.8 V DC ... 30.5 V DC
Max. current consumption	328 mA (at 24 V DC)
Power consumption	8.4 W (peak; 30 dBm)

Output data

Digital

Output name	RF link relay output
Number of outputs	1
Contact switching type	Changeover contact
Contact material	PdRu, gold-plated
Maximum switching voltage	30 V AC/DC
Max. switching current	500 mA
Electrical service life	5x 10^5 switching cycles with 0.5 A at 30 V DC

Analog

Output name	RSSI voltage output
Number of outputs	1
Voltage output signal	0 V ... 3 V

Connection data

Connection method	Screw connection
Stripping length	7 mm
Conductor cross-section, rigid min.	0.2 mm²

Conductor cross-section, rigid max.	2.5 mm²
Conductor cross-section flexible min.	0.2 mm²
Conductor cross-section flexible max.	2.5 mm²
Conductor cross-section AWG min.	24
Conductor cross-section AWG max.	14

Interfaces

Wireless

Range	≤ 32 km (The range may be considerably above or below that stated, and depends on the environment, antenna technology, and the product used)

Serial: RS-232

Data rate	300 bps / 600 bps / 1.2 kbps / 2.4 kbps / 4.8 kbps / 9.6 kbps / 19.2 kbps / 38.4 kbps / 57.6 kbps / 93.75 kbps / 115.2 kbps
Connection method	COMBICON plug-in screw terminal block
	D-SUB-9 female connector
Connection technology	3-conductor

Serial: RS-485

Data rate	300 bps / 600 bps / 1.2 kbps / 2.4 kbps / 4.8 kbps / 9.6 kbps / 19.2 kbps / 38.4 kbps / 57.6 kbps / 93.75 kbps / 115.2 kbps / 187.5 kbps
Connection method	COMBICON plug-in screw terminal block
Connection technology	2-conductor
Termination resistor	390 Ω (switchable via DIP switches)
	150 Ω (switchable via DIP switches)
	390 Ω (switchable via DIP switches)

Serial: Configuration interface

Connection method	S-PORT (socket)

Wireless

Interface description	Trusted Wireless
Direction	Bi-directional
Frequency	900 MHz
Frequency range	902 MHz ... 928 MHz
Transmission power	max. 1 W (adjustable)
Data rate	16 kbps (adjustable)
	125 kbps (adjustable)
	250 kbps (adjustable)
	500 kbps (adjustable)
Minimum receiver sensitivity	-112 dBm (16 kbps)
	-105 dBm (125 kbps)
	-102 dBm (250 kbps)
	-95 dBm (500 kbps)
Antenna connection method	RSMA (female)

Security	128-bit data encryption

Functions

Wireless licenses	Americas, more countries in E-shop
Country support	USA (FCC, Part 15.247, ID: SGV-SHR-900)
	Canada (IC, RSS210, ID: 4720C-SHR900)
	Mexico (IFT, ID: RCPPHRA17-1113)
	Chile
	Argentina

Wireless

Frequency band	900 MHz
Wireless standard	Trusted Wireless

Signaling

Status display	LED supply voltage, PWR (green)
	Green LED (bus communication, DAT)
	LED periphery error, ERR (red)
	3x green, 1x yellow LED (LED bar graph receive quality, RSSI)
	Green LED (receive data, RX)
	Green LED (transmit data, TX)

Dimensions

Dimensional drawing	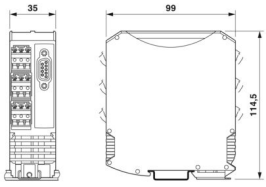
Width	35 mm
Height	116 mm
Depth	114.5 mm

Material specifications

Color (Housing)	gray (RAL 7042)
Flammability rating according to UL 94	V0
Housing material	PA 6.6-FR

Environmental and real-life conditions

Ambient conditions

Degree of protection	IP20
Ambient temperature (operation)	-40 °C ... 70 °C
	-40 °F ... 158 °F
Ambient temperature (storage/transport)	-40 °C ... 85 °C
	-40 °F ... 185 °F

Altitude	2000 m
Permissible humidity (operation)	20 % ... 85 %
Permissible humidity (storage/transport)	20 % ... 85 %
Shock	16g, 11 ms
Vibration (operation)	in accordance with IEC 60068-2-6: 5g, 10 Hz ... 150 Hz

Approvals

Conformity/Approvals

Conformance	FCC Directive, Part 15.247
	ISC Directive RSS 210
UL, USA	Class I, Zone 2, AEx nA nC IIC T4
UL, USA / Canada	Class I, Div. 2, Groups A, B, C, D
UL, Canada	Class I, Zone 2, Ex nA nC nL IIC T4 Gc X
CSA	CSA C22.2

EMC data

Electromagnetic compatibility	Conformance with EMC Directive 2004/108/EC

Standards and regulations

Standard designation	NOM
Note	IFT RCPPHRA17-1113

Mounting

Mounting type	DIN rail mounting
Assembly note	on standard DIN rail NS 35 in accordance with EN 60715
Mounting position	any
Useable DIN rail type	DIN rail: 35 mm

Drawings

Dimensional drawing

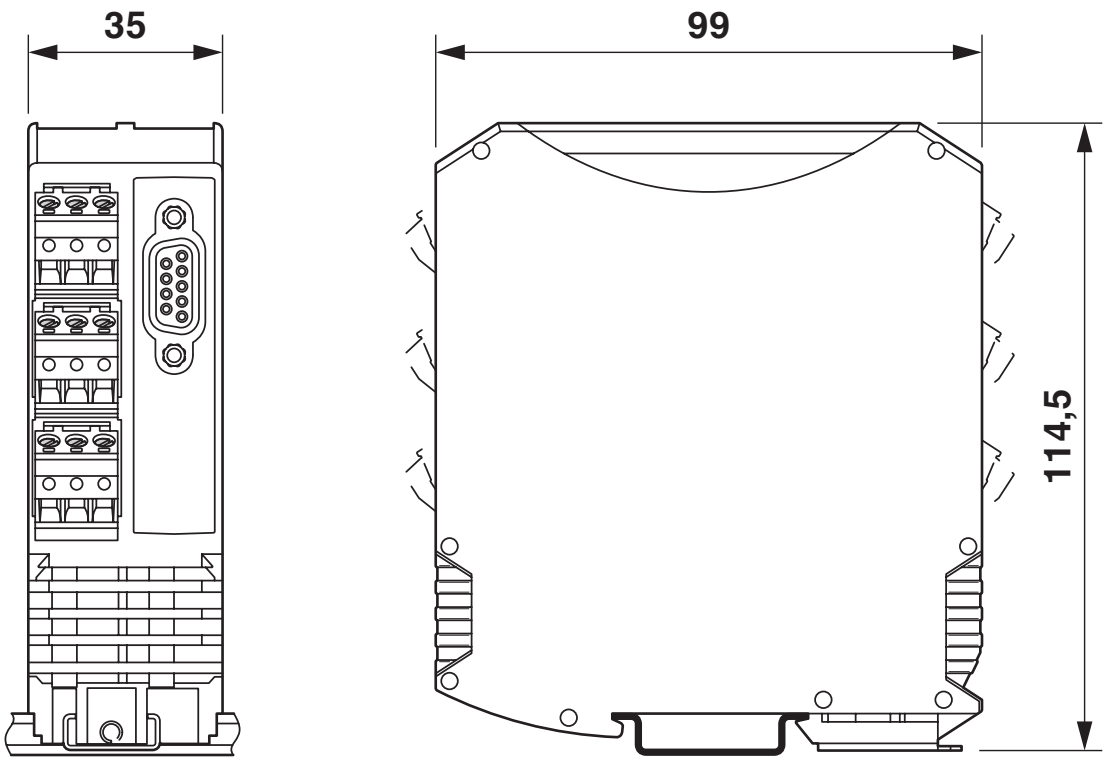

Block diagram

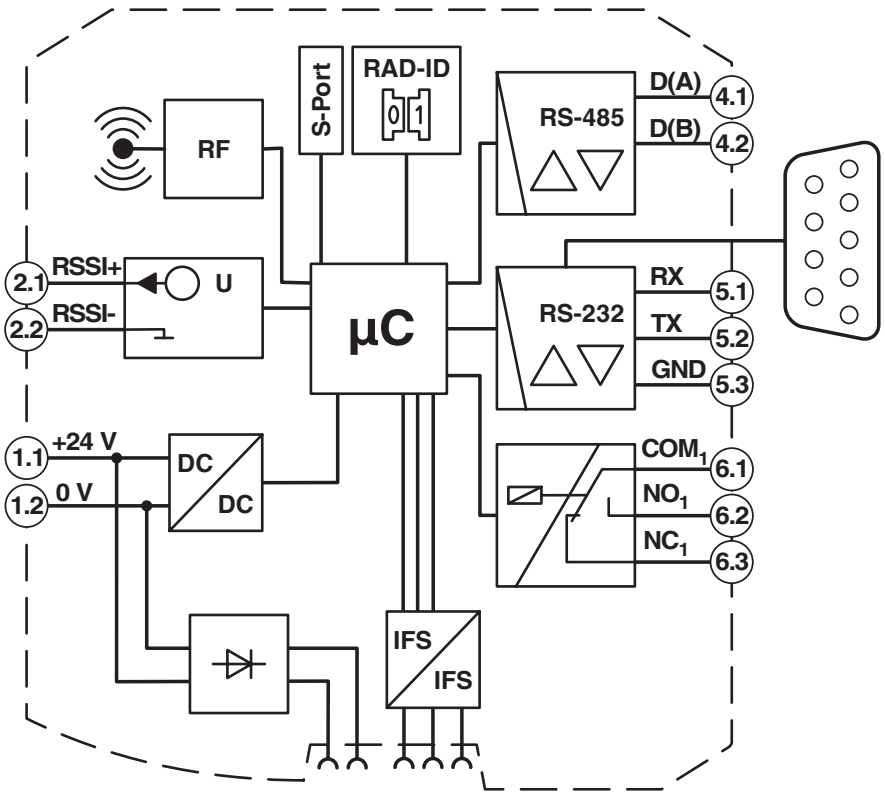

Approvals

To download certificates, visit the product detail page: https://www.phoenixcontact.com/us/products/2901540

UL Listed
Approval ID: E238705

cUL Listed
Approval ID: E238705

FCC
Approval ID: SGV-SHR-900

Industry Canada
Approval ID: 4720C-SHR900

NOM
Approval ID: RCPPHRA17-1113

FCC
Approval ID: SGV-SHR-900

Industry Canada
Approval ID: 4720C-SHR900

cULus Listed
Approval ID: E196811

Classifications

ECLASS

ECLASS-13.0	19170501
ECLASS-15.0	19170501

ETIM

ETIM 10.0	EC000816

UNSPSC

UNSPSC 21.0	43222600

Environmental product compliance

EU RoHS

Fulfills EU RoHS substance requirements	Yes
Exemption	6(c), 7(a), 7(c)-I

China RoHS

Environment friendly use period (EFUP)	EFUP-50
	An article-related China RoHS declaration table can be found in the download area for the respective article under "Manufacturer declaration". For all articles with EFUP-E, no China RoHS declaration table issued and required.

EU REACH SVHC

REACH candidate substance (CAS No.)	Lead(CAS: 7439-92-1)
	6,6'-di-tert-butyl-2,2'-methylenedi-p-cresol(CAS: 119-47-1)
SCIP	282908e6-3884-4187-ae03-2b9b4e935451

Phoenix Contact 2026 © - all rights reserved
https://www.phoenixcontact.com

Phoenix Contact USA
586 Fulling Mill Road
Middletown, PA 17057, United States
(+717) 944-1300
info@phoenixcon.com