PSR-SCP-230AC/ESAM2/3X1/1X2/B - Safety relays

2901430

https://www.phoenixcontact.com/us/products/2901430

Please be informed that the data shown in this PDF document is generated from our online catalog. Please find the complete data in the user documentation. Our general terms of use for downloads are valid.



Safety relay for emergency stop and safety door up to SIL 1, Cat. 1, PL c, depending on the application up to SIL 3, Cat. 4, PL e, single-channel operation, 3 enabling current paths, nominal input voltage of 230 V AC, plug-in screw terminal blocks

Your advantages

- Up to Cat. 1/PL c in accordance with ISO 13849-1, SIL 1 in accordance with EN IEC 62061, SIL 1 in accordance with IEC 61508
- Depending on the application, up to Cat. 4/PL e in accordance with ISO 13849-1, SIL 3 in accordance with EN IEC 62061, SIL 3 in accordance with IEC 61508
- 1-channel control
- Basic insulation

ELEKTROGERÄTE RÜCKNAHME

Commercial data

Item number	2901430
Packing unit	1 pc
Minimum order quantity	1 pc
Product key	DNA111
GTIN	4046356592185
Weight per piece (including packing)	199 g
Weight per piece (excluding packing)	165.8 g
Country of origin	DE

Technical data

Notes

Note on application

Note on application	Only for industrial use

Product properties

Product type	Safety relays
Product family	PSRclassic
Application	Emergency stop
	Safety door
Control	1-channel
Mechanical service life	approx. 10^7 cycles
Relay type	Electromechanical relay with force-guided contacts in accordance with IEC/EN 61810-3

Insulation characteristics

Overvoltage category	II, III (See the section “Insulation coordination”)
Degree of pollution	2

Times

Typical response time	300 ms (automatic start)
	50 ms (manual, monitored start)
Typ. starting time with U_s	300 ms (when controlled via A1 or S11/S12)
Typical release time	20 ms (when controlled via S11/S12)
	150 ms (when controlled via A1)
Recovery time	1 s

Electrical properties

Maximum power dissipation for nominal condition	16.4 W (At I_L^2 = 72 A²,$P_{Total\ max}$ = 2 W + 14.4 W)
Nominal operating mode	100% operating factor
Rated insulation voltage	250 V AC
Rated surge voltage/insulation	4 kV / basic insulation (safe isolation, reinforced insulation, and 6 kV between A1-A2/logic/enabling and signaling current paths)

Supply

Rated control circuit supply voltage U_S	230 V AC -15 % / +10 %
Rated control supply current I_S	typ. 22 mA (at U_N)
Apparent power	typ. 4.5 VA (at U_N)
Protective circuit	Surge protection; Suppressor diode

Input data

Digital: Sensor circuit (S12)

Description of the input	safety-related

Max. permissible overall conductor resistance	50 Ω

Digital: Start circuit (S34, S35)

Description of the input	non-safety-related
Max. permissible overall conductor resistance	50 Ω

Output data

Relay: Enabling current paths (13/14, 23/24, 33/34)

Number of outputs	3 (undelayed)
Contact switching type	3 enabling current paths
Contact material	$AgSnO_2$, + 0.2 µm Au
Switching voltage	min. 10 V AC/DC
	max. 250 V AC/DC
Switching power	min. 100 mW
Inrush current	min. 10 mA
	max. 6 A
Switching capacity	6 A (24 V (DC13))
	5 A (230 V (AC15))
Limiting continuous current	6 A (observe derating)
Sq. Total current	72 A^2 (observe derating)
Switching frequency	max. 0.5 Hz
Mechanical service life	10x 10^6 cycles
Output fuse	10 A gL/gG NEOZED

Relay: Signaling current path (41/42)

Number of outputs	1 (undelayed)
Contact switching type	1 signaling current path
Contact material	$AgSnO_2$, + 0.2 µm Au
Switching voltage	min. 10 V AC/DC
	max. 250 V AC/DC
Switching power	min. 100 mW
Inrush current	min. 10 mA
	max. 6 A
Limiting continuous current	5 A
Sq. Total current	72 A^2
Switching frequency	max. 0.5 Hz
Output fuse	6 A gL/gG NEOZED

Connection data

Connection technology

pluggable	yes

Conductor connection

Connection method	Screw connection

Conductor cross-section rigid	0.2 mm² ... 2.5 mm²
Conductor cross-section flexible	0.2 mm² ... 2.5 mm²
Conductor cross-section AWG	24 ... 12
Stripping length	7 mm
Screw thread	M3
Tightening torque	0.5 Nm ... 0.6 Nm

Signaling

Status display	2 x LED (green)
Operating voltage display	1 x LED (green)

Dimensions

Width	22.5 mm
Height	99 mm
Depth	114.5 mm

Material specifications

Color	yellow (RAL 1018)
Housing material	PA

Characteristics

Safety data

Stop category (EN 60204-1)	0 (Undelayed contacts)

Safety data: EN ISO 13849

Performance level (PL)	c (up to PL e depending on the application)

Safety data

Safety Integrity Level (SIL)	1 (up to SIL 3 depending on the application)

Safety data

Safety Integrity Level (SIL)	1 (up to SIL 3 depending on the application)

Safety data

Safety Integrity Level (SIL)	1 (up to SIL 3 depending on the application)

Environmental and real-life conditions

Ambient conditions

Degree of protection	IP20
Min. degree of protection of inst. location	IP54
Ambient temperature (operation)	-25 °C ... 55 °C
Ambient temperature (storage/transport)	-40 °C ... 85 °C
Maximum altitude	≤ 2000 m (Above sea level)
Max. permissible humidity (storage/transport)	75 % (on average, 85% infrequently, non-condensing)
Max. permissible relative humidity (operation)	75 % (on average, 85% infrequently, non-condensing)

Shock	15g
Vibration (operation)	10 Hz ... 150 Hz, 2g

Approvals

CE

Identification	CE-compliant

Mounting

Mounting type	DIN rail mounting
Mounting position	any

Drawings

Circuit diagram

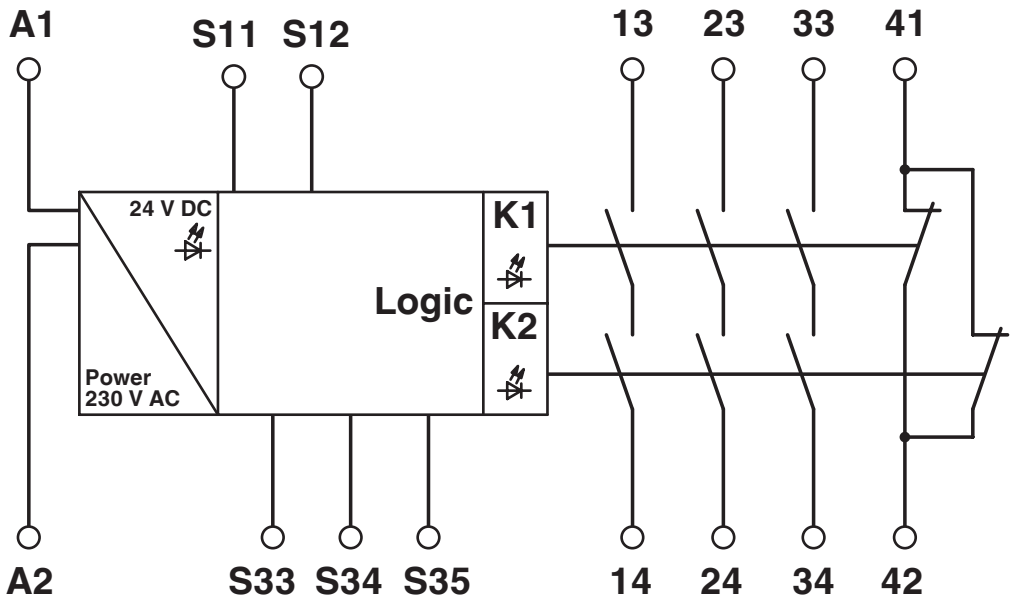

Block diagram

Circuit diagram

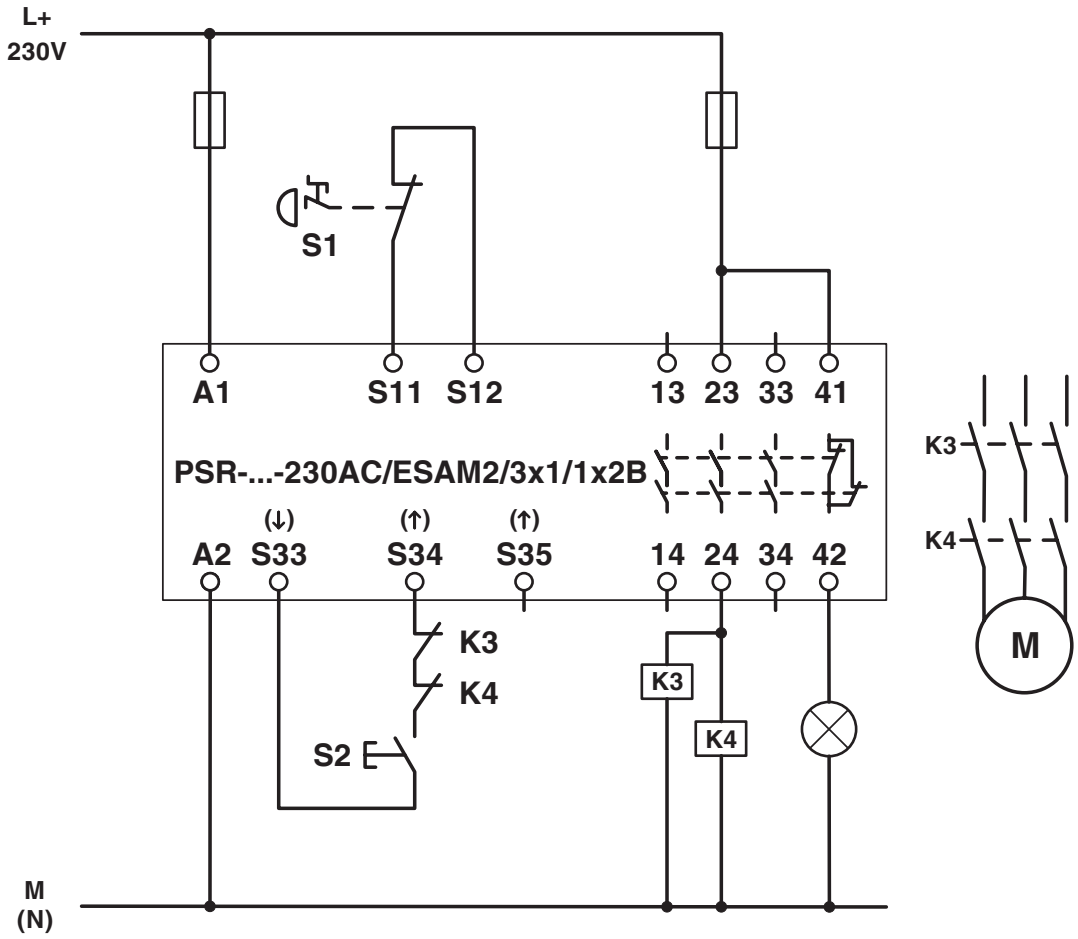

Single-channel emergency stop monitoring

Circuit diagram

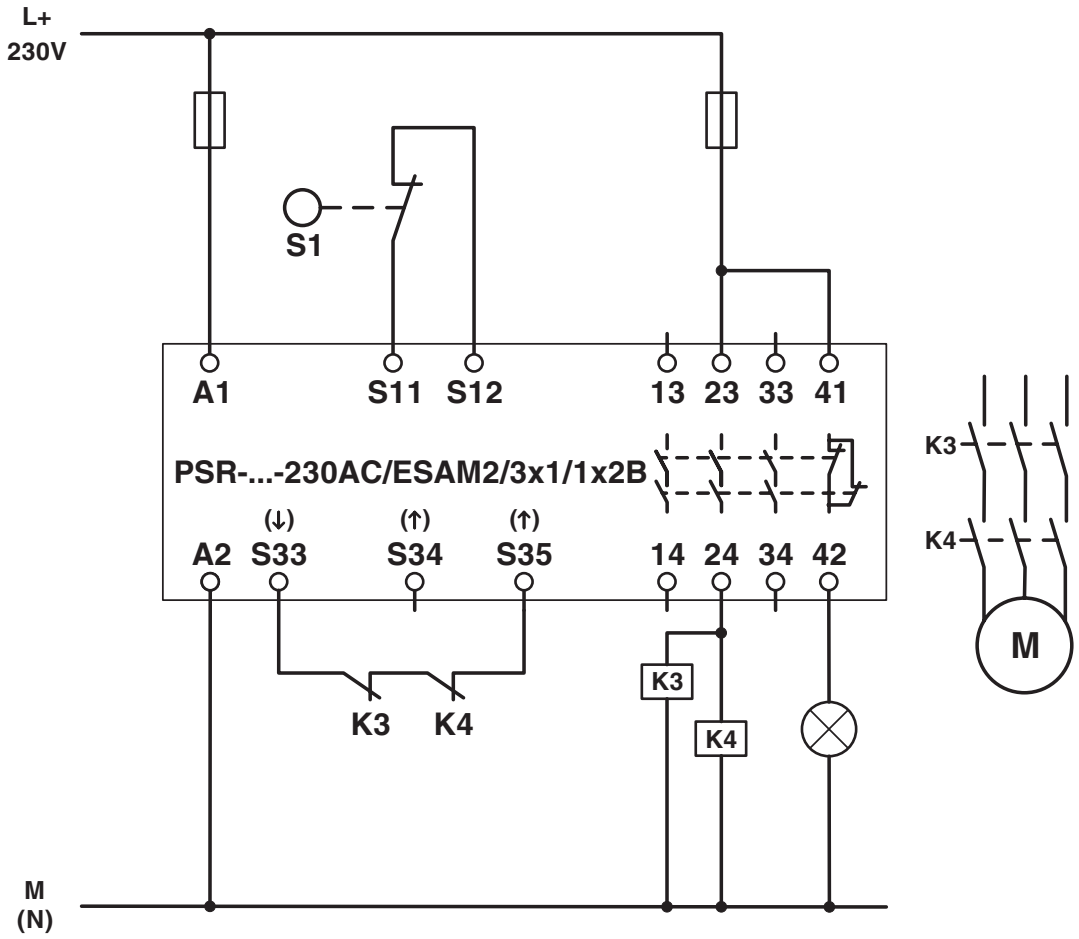

Single-channel safety door monitoring

Approvals

To download certificates, visit the product detail page: https://www.phoenixcontact.com/us/products/2901430

cULus Listed
Approval ID: E140324

Functional Safety
Approval ID: 01/205/5117.04/23

Classifications

ECLASS

ECLASS-13.0	27371819
ECLASS-15.0	27371819

ETIM

ETIM 10.0	EC001449

UNSPSC

UNSPSC 21.0	39122200

Environmental product compliance

EU RoHS

Fulfills EU RoHS substance requirements	Yes
Exemption	7(a), 7(a)-I, 7(c)-I

China RoHS

Environment friendly use period (EFUP)	EFUP-50
	An article-related China RoHS declaration table can be found in the download area for the respective article under "Manufacturer declaration". For all articles with EFUP-E, no China RoHS declaration table issued and required.

EU REACH SVHC

REACH candidate substance (CAS No.)	Lead(CAS: 7439-92-1)
SCIP	cbf8e95b-357e-4ac2-94f3-67f3e3279f4e

Phoenix Contact 2026 © - all rights reserved
https://www.phoenixcontact.com

Phoenix Contact USA
586 Fulling Mill Road
Middletown, PA 17057, United States
(+717) 944-1300
info@phoenixcon.com