PLC-OPT-110DC/300DC/1 - Solid-state relay module

2900385

https://www.phoenixcontact.com/us/products/2900385

Please be informed that the data shown in this PDF document is generated from our online catalog. Please find the complete data in the user documentation. Our general terms of use for downloads are valid.



PLC-INTERFACE, integrated solid-state relay, with push-in connection, for mounting on NS 35/7,5 DIN rails, input: 110 V DC, output: 12 - 300 V DC/1 A

Your advantages

- Wear-free switching with no contact bounce
- Resistant to vibrations and shocks
- Protective circuit in input and output
- Status indicator
- DC voltage outputs up to 300 V DC/1 A
- Option of bridging adjacent modules

Commercial data

Item number	2900385
Packing unit	10 pc
Minimum order quantity	10 pc
Sales key	C461
Product key	DK62A3
GTIN	4046356506892
Weight per piece (including packing)	31.55 g
Weight per piece (excluding packing)	31.55 g
Customs tariff number	85364900
Country of origin	DE

Technical data

Product properties

Product type	Solid-state relay module
Product family	PLC-INTERFACE
Application	With integrated solid-state relay
Operating mode	100% operating factor

Insulation characteristics: Standards/regulations

Insulation	Basic insulation
Overvoltage category	III
Pollution degree	2

Data management status

Date of last data management	01.04.2026

Electrical properties

Maximum power dissipation for nominal condition	0.55 W

Standards/regulations

Rated insulation voltage	300 V
Rated surge voltage	2.5 kV

Input data

Nominal input voltage U_N	110 V DC
Input voltage range in reference to U_N	0.8 ... 1.2
Input voltage range	88 V DC ... 132 V DC
Switching threshold "0" signal in reference to U_N	≤ 0.4
Switching threshold "1" signal in reference to U_N	≥ 0.8
Typical input current at U_N	5 mA
Typical response time	0.4 ms
Typical turn-off time	0.7 ms
Operating voltage display	Yellow LED
Protective circuit	Reverse polarity protection; Polarity protection diode
	Surge protection; Varistor
Transmission frequency	50 Hz

Output data

Output data

Contact switching type	1 N/O contact
Design of digital output	electronic
Output voltage range	12 V DC ... 300 V DC (Divider plate PLC-ATP must be installed for voltages larger than 250 V (L1, L2, L3) between identical terminal points in adjacent modules. Potential bridging is then carried out with FBST 8-PLC... or ...FBST 500...)

Limiting continuous current	1 A (see derating curve)
Voltage drop at max. limiting continuous current	< 500 mV
Protective circuit	Reverse polarity protection; Polarity protection diode
	Surge protection; Varistor

Connection data

Connection method	Push-in connection
Stripping length	10 mm
Conductor cross-section rigid	0.14 mm² ... 2.5 mm²
Conductor cross-section flexible	0.14 mm² ... 2.5 mm²
	0.2 mm² ... 2.5 mm² (Single ferrule)
	2x 0.5 mm² ... 1 mm² (TWIN ferrule)
Conductor cross-section AWG	26 ... 14

Dimensions

Item dimensions

Width	6.2 mm
Height	80 mm
Depth	94 mm

Material specifications

Color	gray (RAL 7042)
Flammability rating according to UL 94 (Housing)	V0 (Housing)

Environmental and real-life conditions

Ambient conditions

Ambient temperature (operation)	-25 °C ... 60 °C
Ambient temperature (storage/transport)	-40 °C ... 85 °C

Approvals

CE

Certificate	CE-compliant

UKCA

Certificate	UKCA-compliant

Shipbuilding approval

Certificate	TAE0000196

Corrosive gas test

Identification	ISA-S71.04. G3 Harsh Group
	EN 60068-2-60

Shipbuilding data

Temperature	D

Humidity	A
Vibration	B/C
EMC	B
Enclosure	Required protection according to the Rules shall be provided upon installation on board

EMC data

Electromagnetic compatibility	Conformance with EMC directive
Low Voltage Directive	Conformance with Low Voltage Directive

Standards and regulations

Standards/regulations

Standards/regulations	IEC 60947-5-1

Mounting

Mounting type	DIN rail mounting
Assembly note	in rows with zero spacing
Mounting position	any

Drawings

Diagram

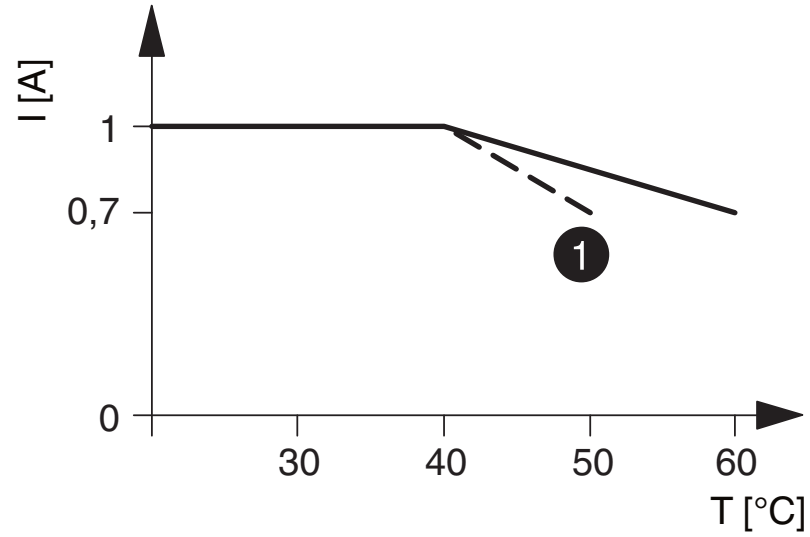

1 Input voltages 220 V DC/230 V AC

The figure shows the derating curve for PLC-...300DC/1

Circuit diagram

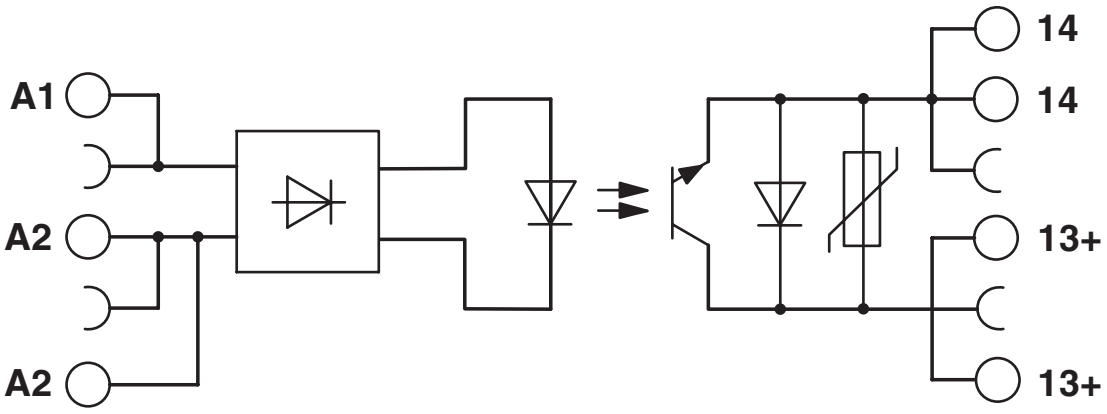

Approvals

To download certificates, visit the product detail page: https://www.phoenixcontact.com/us/products/2900385

cULus Listed
Approval ID: E140324

cULus Listed
Approval ID: E140324

cULus Listed
Approval ID: E140324

DNV
Approval ID: TAE0000196

Classifications

ECLASS

ECLASS-13.0	27371604
ECLASS-15.0	27371604

ETIM

ETIM 10.0	EC001504

UNSPSC

UNSPSC 21.0	39122300

Environmental product compliance

EU RoHS

Fulfills EU RoHS substance requirements	Yes
Exemption	7(a), 7(c)-I

China RoHS

Environment friendly use period (EFUP)	EFUP-50
	An article-related China RoHS declaration table can be found in the download area for the respective article under "Manufacturer declaration". For all articles with EFUP-E, no China RoHS declaration table issued and required.

EU REACH SVHC

REACH candidate substance (CAS No.)	Lead(CAS: 7439-92-1)
SCIP	5ea22f83-7cfa-4dac-ae75-b71ae3449eef

EF3.1 Climate Change

CO2e kg	1.796 kg CO2e

Phoenix Contact 2026 © - all rights reserved
https://www.phoenixcontact.com

Phoenix Contact USA
586 Fulling Mill Road
Middletown, PA 17057, United States
(+717) 944-1300
info@phoenixcon.com